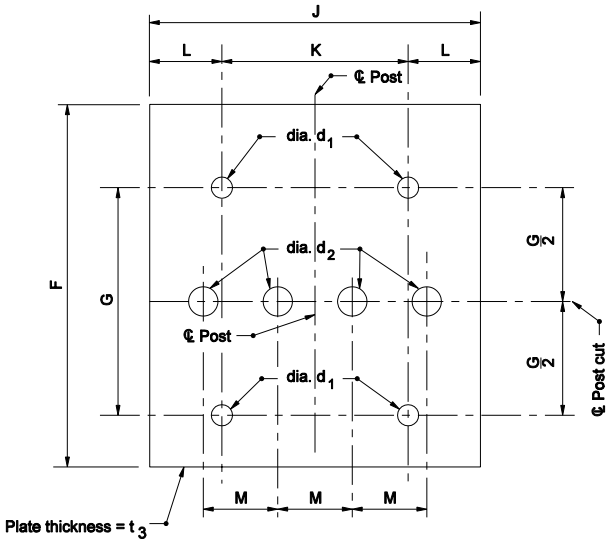

PERFORATED FUSE PLATE DETAIL (3.)

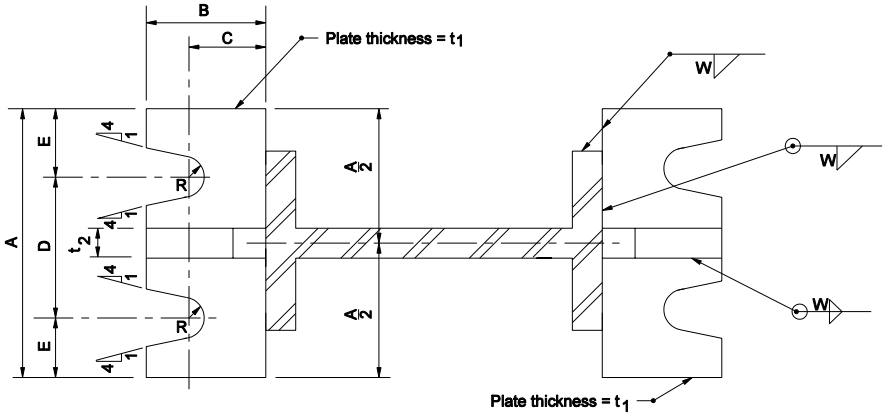

BASE PLATE DETAIL

Notes:

1. See table on Standard Drawing 802-SNGP-05 for diminsions and weight of stiffener plate and base plate.
2. See table on Standard Drawing 802-SNGP-06 for dimensions and weight of preforated fuse plate.
3. Use H.S. bolts with hex head, & hex nut, one flat washer under each bolt head and beveled or flat washer (where required) under nut.
4. For dimensions of clipped washer, see table 1, Manual of Steel Construction, AISC 8th Edition, specification for ASTM A325 and A490 Bolts.
5. Dimensional tolerances excluding the thickness for shims is ± 1.

SHIM DETAIL						
BOLT DIAMETER	L	W	N	R	S	X
M12 to M20	44	44	12	10	21	12
M24	51	51	9.5	16	32	12

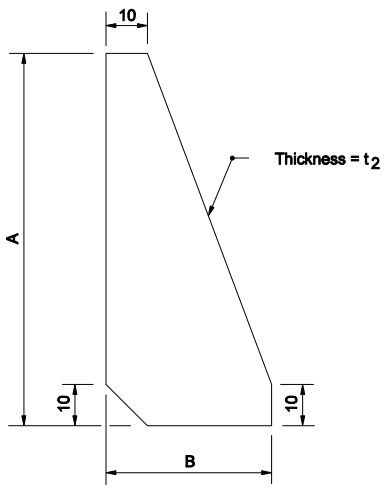

STIFFENER PLATE DETAIL

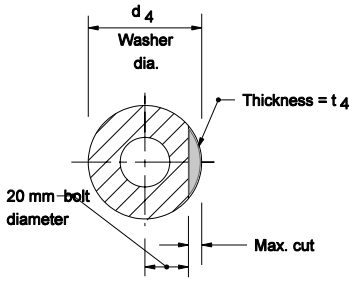

NOTE:
The inside diameter of washer is equal to bolt diameter plus 2 mm.

CLIPPED WASHER DETAIL (4.)

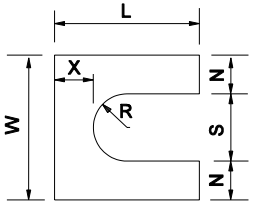

Furnish 2-0.012 ± thick and 2-0.03± thick shims per post.

SHIM DETAIL

All Dimension are in mm unless otherwise specfied

INDIANA DEPARTMENT OF TRANSPORTATION

SIGN DETAILS

MARCH 2004

STANDARD DRAWING NO. 802-SNGP-04

RICHARD L. VanCLEAVE REGISTERED No. 9750 STATE OF INDIANA PROFESSIONAL ENGINEER

DESIGN STANDARDS ENGINEER

/s/ Richard L. VanCleave 3-01-04
DESIGN STANDARDS ENGINEER DATE

/s/ Richard K. Smutzer 3-01-04
CHIEF HIGHWAY ENGINEER DATE