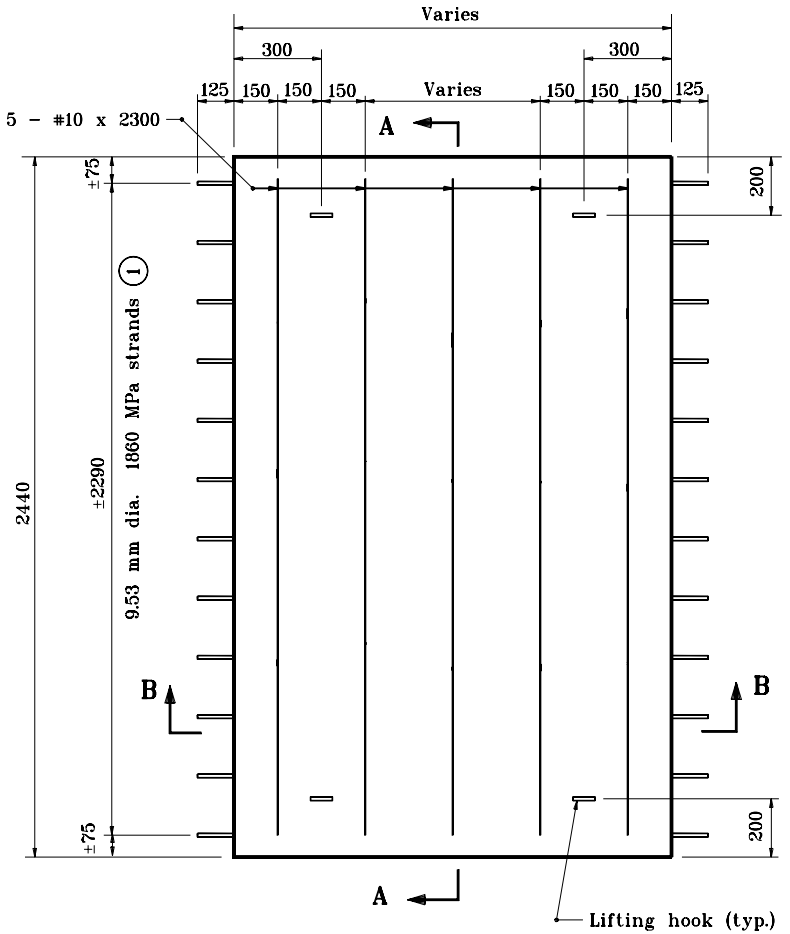

PLAN

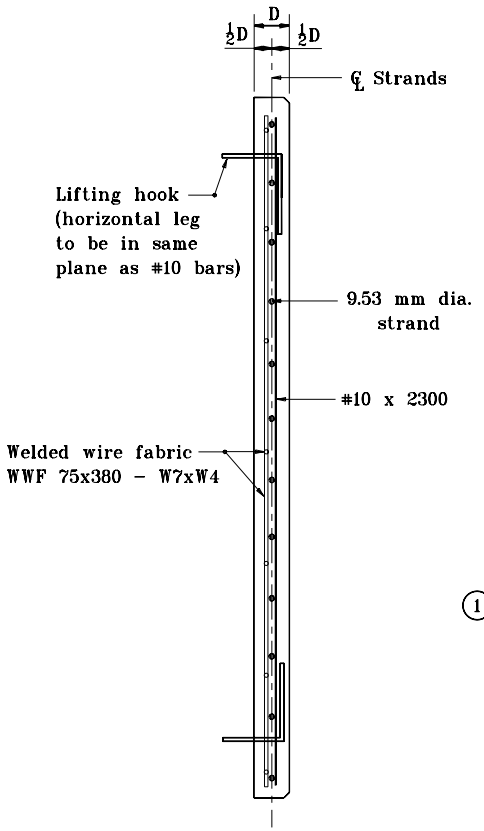

SECTION A–A

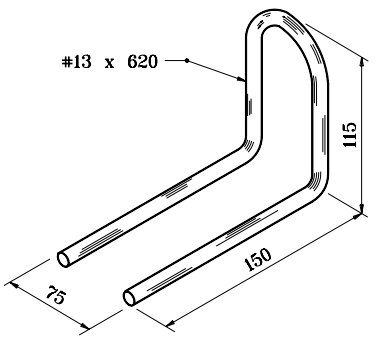

LIFTING HOOK DETAIL

NOTES :

(1) See Standard Drawing 707–BPDP–02 for Strand Table and General Notes.

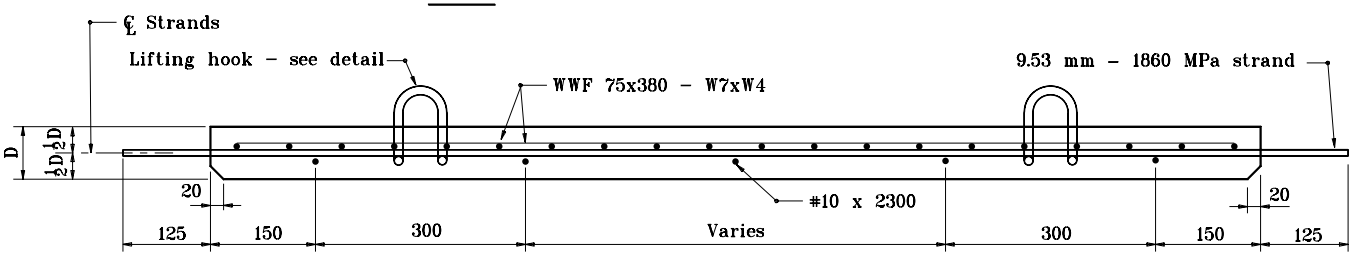

SECTION B–B

All dimensions are in mm unless otherwise specified.

INDIANA DEPARTMENT OF TRANSPORTATION

PRECAST DECK PANEL PLAN AND SECTIONS

MAY 2000

STANDARD DRAWING NO. **707–BPDP–01**

ANTHONY L. UREMOVICH REGISTERED No. 18095 STATE OF INDIANA PROFESSIONAL ENGINEER

DESIGN STANDARDS ENGINEER

/s/ Anthony L. Uremovich 11-15-99
DESIGN STANDARDS ENGINEER DATE

/s/ Firooz Zandi 11-15-99
CHIEF HIGHWAY ENGINEER DATE