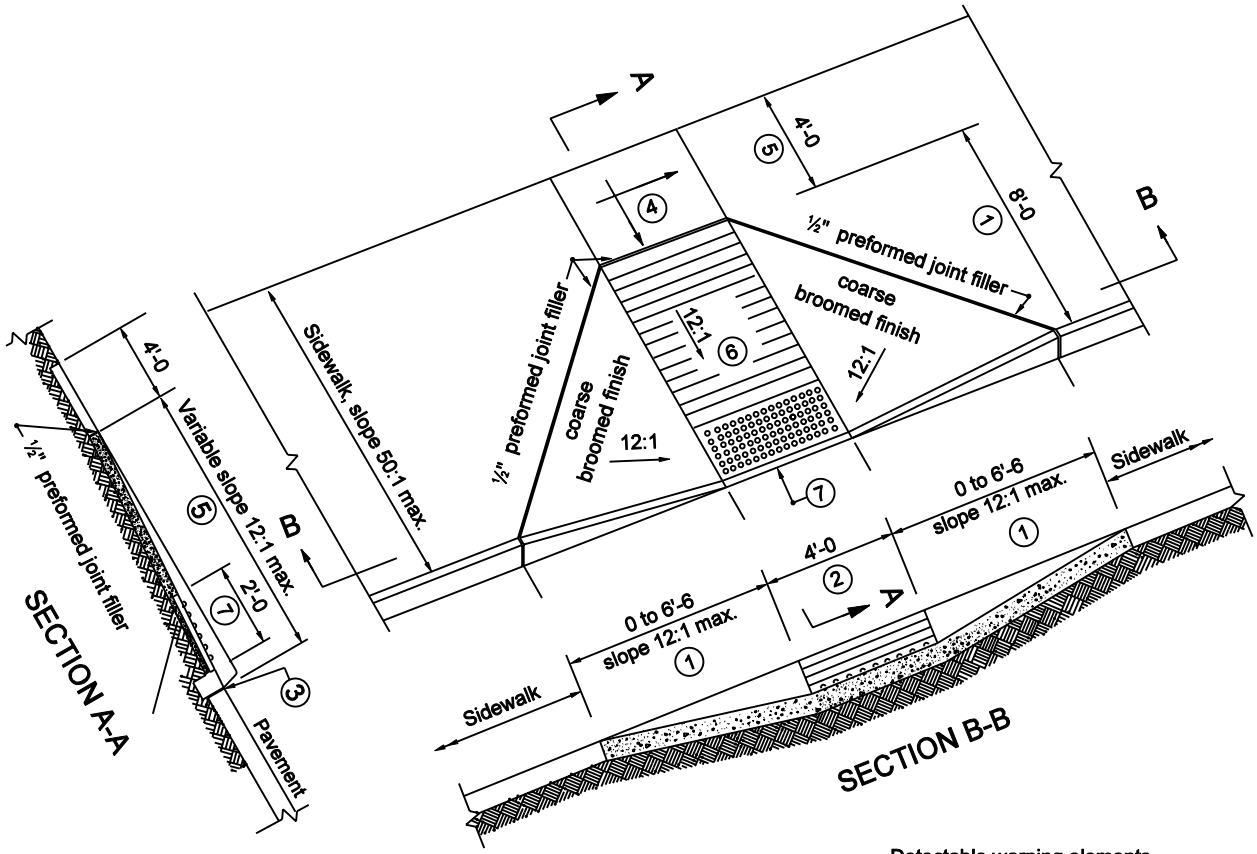

NOTES :

6. See Standard Drawing E 604-SWCR-02 for groove details.
7. See Standard Drawing E 604-SWCR-02 for details of the detectable warning.
8. See Standard Drawing E 604-SWCR-02 for alternate curb construction.
9. Indicated area denotes pay limits.
10. See Standard Drawing E 604-SWCR-01 and -02 for Location Plan and General Notes respectively.

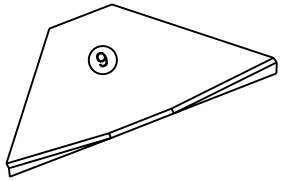

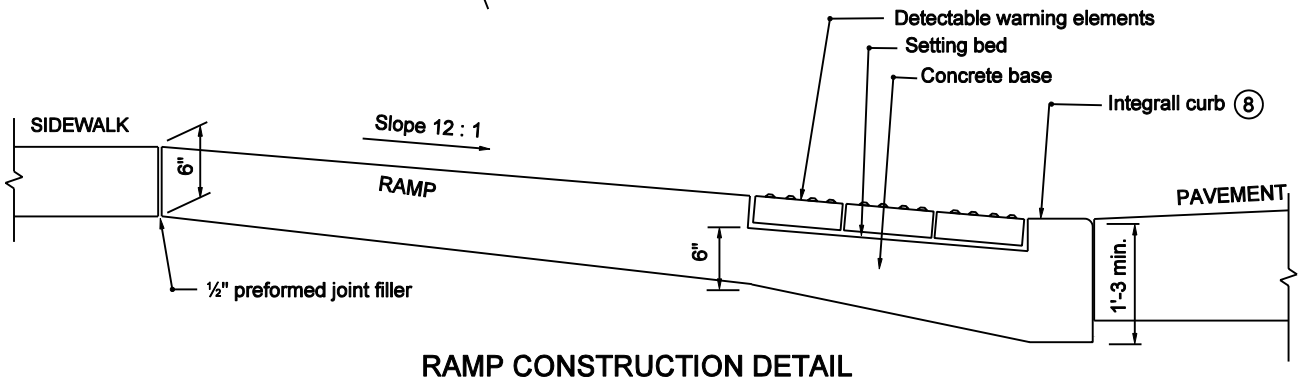

RAMP CONSTRUCTION DETAIL

INDIANA DEPARTMENT OF TRANSPORTATION

SIDEWALK CURB RAMP TYPE A

SEPTEMBER 2003

STANDARD DRAWING NO. E 604-SWCR-03

REGISTERED ANTHONY L. UREMOVICH No. 18095 STATE OF INDIANA PROFESSIONAL ENGINEER

DESIGN STANDARDS ENGINEER

/s/ Anthony L. Uremovich — DESIGN STANDARDS ENGINEER — 9-02-03 DATE

/s/ Richard L. Sumtzer — CHIEF HIGHWAY ENGINEER — 9-02-03 DATE