GENERAL NOTES

(1) If inlet pipe is required, this dimension shall be increased or decreased 1'-0 as directed.

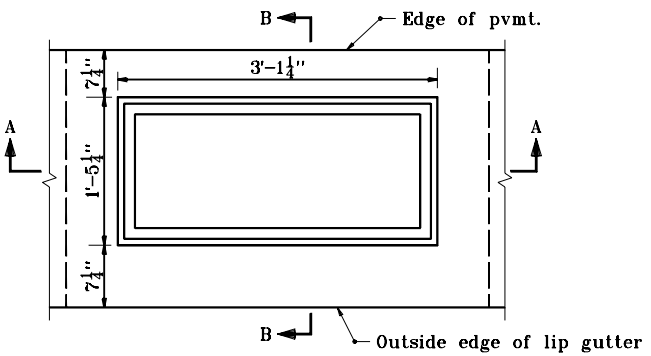

PLAN

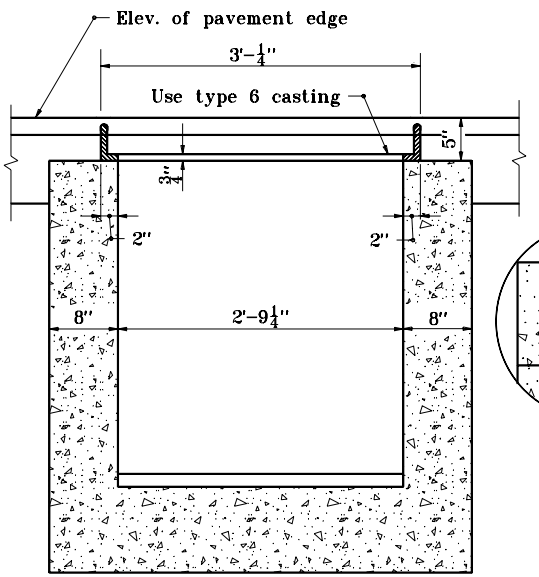

SECTION A-A

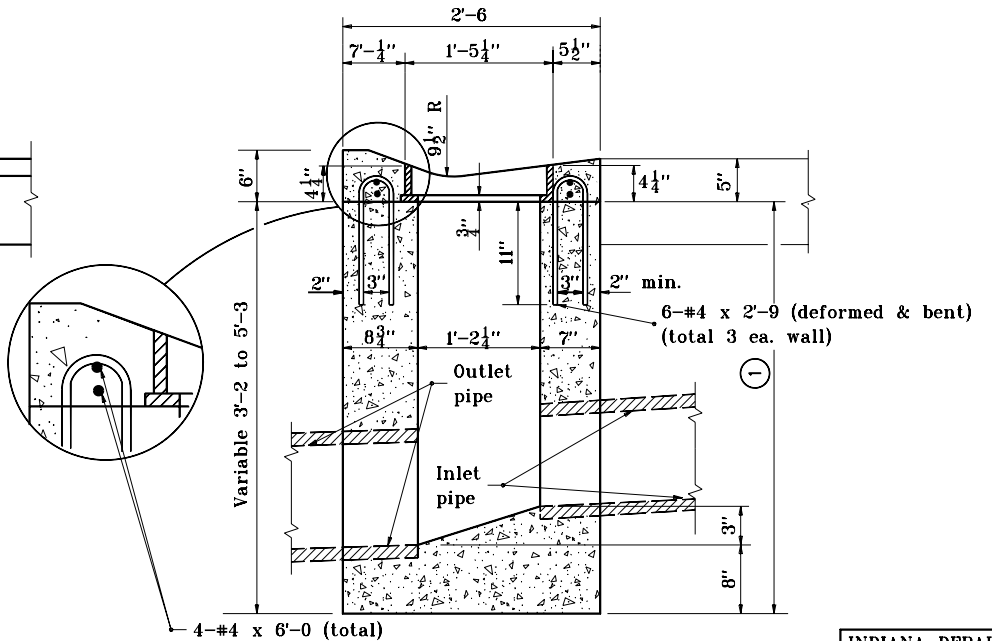

SECTION B-B

INDIANA DEPARTMENT OF TRANSPORTATION

INLET TYPE D

SEPTEMBER 1997

STANDARD DRAWING NO. E 720-INST-03

ANTHONY L. URENOVICH REGISTERED No. 18095 STATE OF INDIANA PROFESSIONAL ENGINEER

DESIGN STANDARDS ENGINEER

DETAILS PLACED IN THIS FORMAT	11-15-99
/s/ Anthony L. Uremovich DESIGN STANDARDS ENGINEER	11-15-99 DATE
/s/ Firooz Zandi CHIEF HIGHWAY ENGINEER	11-15-99 DATE
ORIGINALLY APPROVED	9-01-97