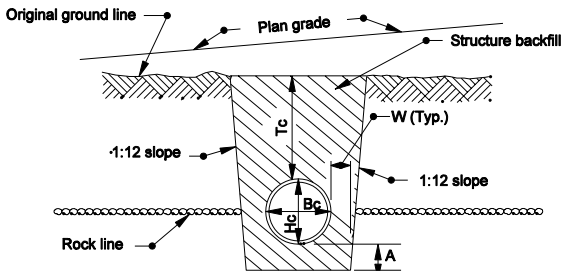

SECTION B-B
ROCK FOUNDATION

NOTE

1. Refer to Standard Drawing 715-BKFL-09 for general notes.

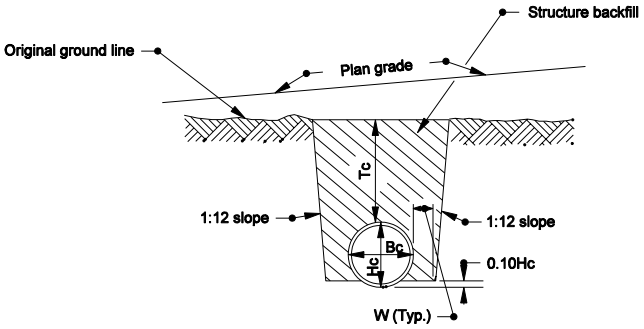

SECTION B-B

LEGEND

Hc = Overall diameter or rise (Typ.)
Bc = Overall diameter or span
A = 200 min. for fill height up to 5.0 m
= 300 min. for fill height of 5.0 m or more
Tc = Trench cover depth
W = 0.3 Bc or 230, whichever is greater
⑦ E = Encasement

METHOD 1 BACKFILL

Structures under mainline pavement and public road approaches.

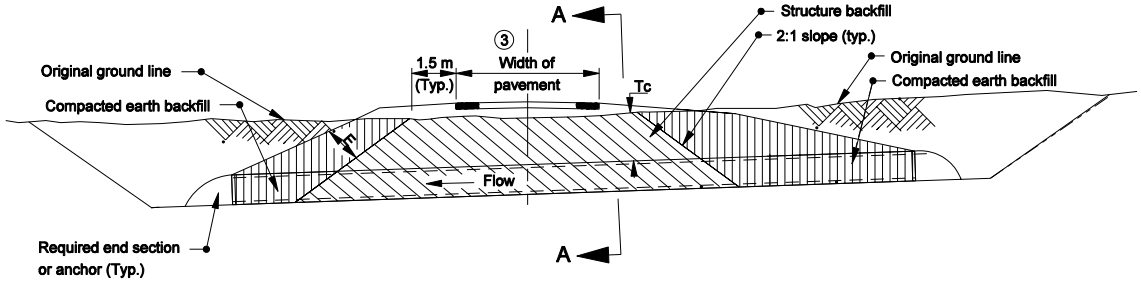

ELEVATION

All Dimension are in mm unless otherwise specfied

INDIANA DEPARTMENT OF TRANSPORTATION

PIPE STRUCTURE BACKFILL TRENCH INSTALLATIONS

SEPTEMBER 2005

STANDARD DRAWING NO. 715-BKFL-03

RICHARD L. VanCLEAVE REGISTERED No. 9750 STATE OF INDIANA PROFESSIONAL ENGINEER

DESIGN STANDARDS ENGINEER

/s/ Richard L. VanCleave 9-01-05
DESIGN STANDARDS ENGINEER DATE

/s/ Richard K. Smutzer 9-01-05
CHIEF HIGHWAY ENGINEER DATE