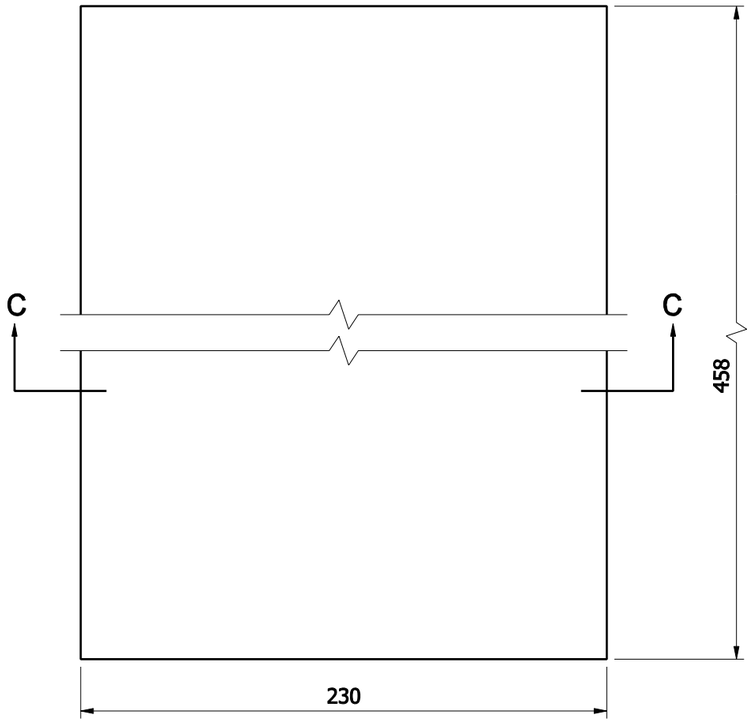

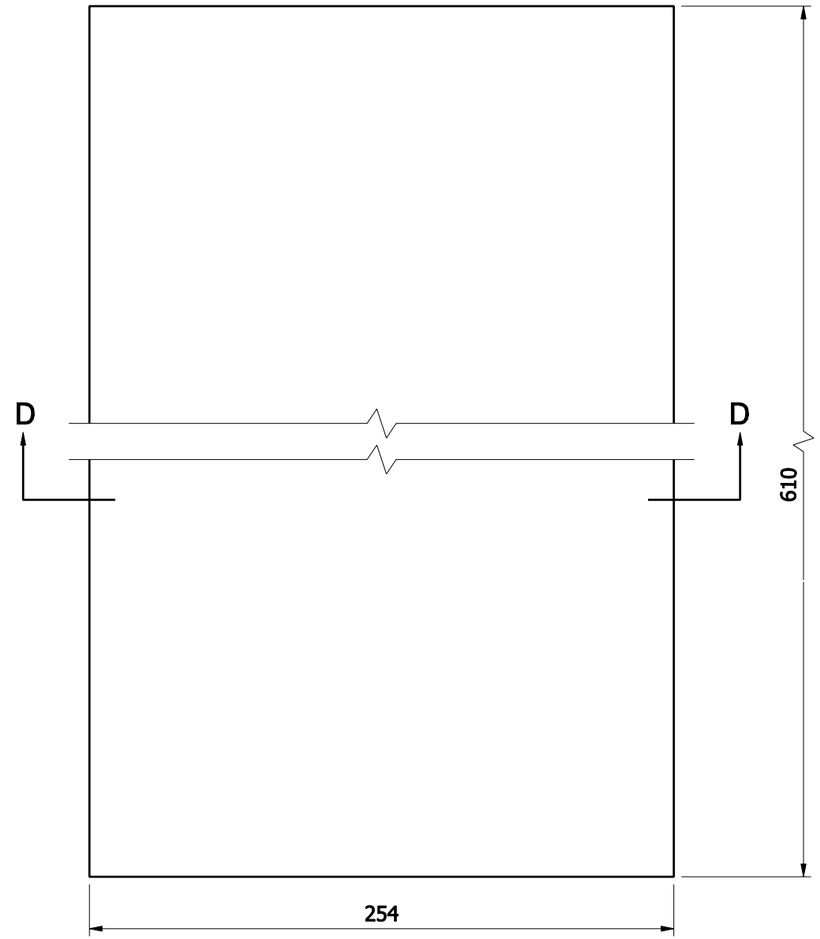

NOTES:

1. The sealing ribs shown in Alternate section C-C and D-D are optional for pads Type 3 and 4. If used, the rib shall extend along all sides of the pad, both top and bottom.

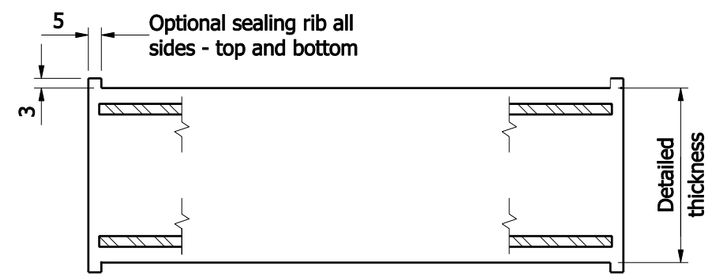

OPTIONAL SEALING RIBS
ALTERNATE SECTIONS A-A AND B-B

All Dimensions are in mm unless otherwise specified.

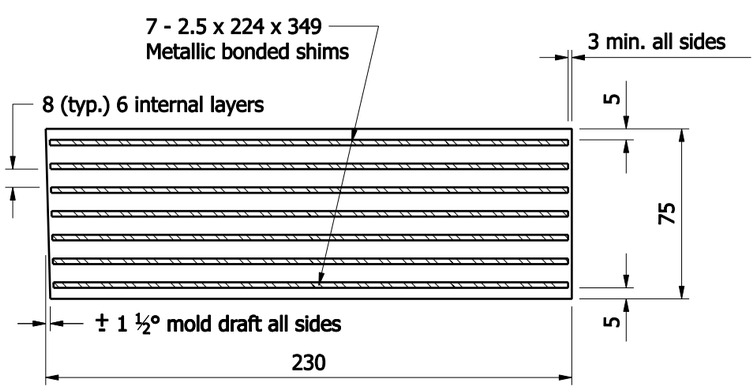

SECTION C-C
TYPE 3

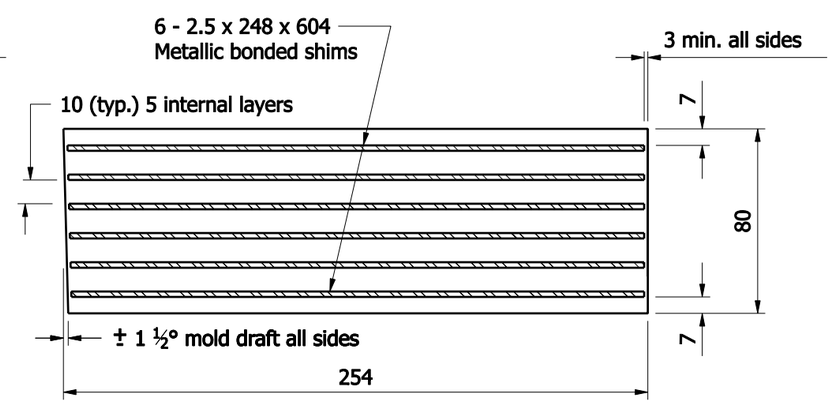

SECTION D-D
TYPE 4

INDIANA DEPARTMENT OF TRANSPORTATION

ELASTOMERIC BEARING PADS
TYPE 3 & 4

SEPTEMBER 2008

STANDARD DRAWING NO. 707-BEBP-02

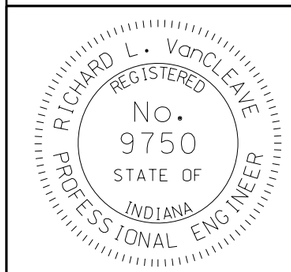

DESIGN STANDARDS ENGINEER

/s/ Richard L. VanCleave 09/02/08
DESIGN STANDARDS ENGINEER DATE

/s/ Mark A. Miller 09/02/08
CHIEF HIGHWAY ENGINEER DATE