Appendix A

Pile Driving Record and Bearing Conversion Charts

CONTRACT NO. B-13143

STRUCTURE NO. 41-23-6535

PROJECT NO. EG-BRE-F-037-3(1)

TYPE STRUCTURE C.C. STEEL GIRDER

PILE DRIVING RECORD

PIER #4

DATE 10/29/81

RECORD NO. 2

FOR 14" STEEL SHELL (TYPE OF PILING)

Kobe K-13 DIESEL (TYPE HAMMER)

Found. and Pile Number	Length Put in Leads	Length Cut off	Length Below Cut off	Total Penetration Last 20 Blows	Weight and Drop or B P M and Energy		Bearing Value in Tons	Remarks Bearing Required, Etc.
30	50.0'		16.5'	1 1/4"	2860	6.5'	91.9	Min Bearing 40 Ton
			33.0'	7"	"	5.5'	28.1	Tip Elev 470.00
			35.0'	7"	"	5.5'	28.1	
			39.0'	5"	"	6.0'	39.4	
		10.5'	39.5'	3/4"	2860	8.0'	173.1	
26	50.0'		35'	7"	2860	5.0'	25.5	Piling #26427 14" Shell
			40'	5"	"	6.0'	39.4	pile is Collapsed
			41'	6"	"	6.0'	34.4	
			43'	9"	"	5.0'	20.9	
			47'	9 1/2"	"	5.0'	20.0	
			48'	4"	"	5.5'	42.1	
			49'	2 1/2"	"	6.0'	61.2	
	25.0'		55'	3 1/2"	"	4.5'	37.6	SPLICED ON 25'
			56'	4"	"	4.5'	34.4	
			57'	5"	"	4.5'	29.5	
			59'	6"	"	5.0'	28.7	
			61'	5 1/2"	"	5.0'	30.6	
			61.5'	1 1/2"	"	6.0'	78.7	
		13.3'	61.7'	1 1/4"	2860	6.0'	84.8	
#27	50	3'	47'	2	2860	5.5	63.1	
	175.0	26.8'	148.2	TOTALS THIS REPORT				
	0	0	0	TOTALS LAST REPORT				ALLOWABLE SPLICES
	175.0'	26.8'	148.2	TOTALS TO DATE				

12-21-81

B-13443
STR# 41-23-6535

PIER #

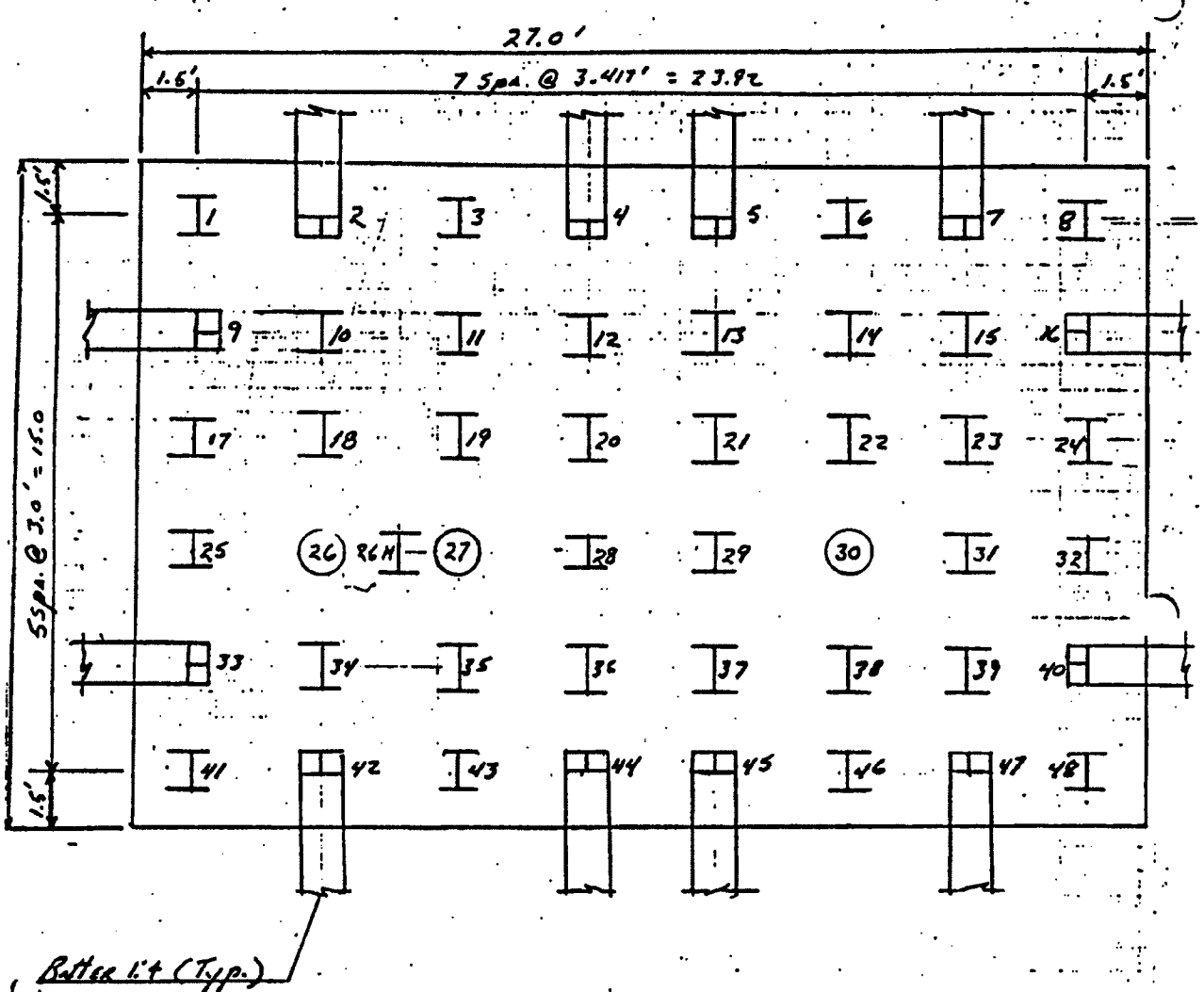

3 SHELL Piling 14"
48 STEEL Piling 12" BP 53'
Min Tip El.
40.0 Ton Min Bearing

H = 8.2' Delmag D- 12 Diesel Pile Hammer

W = 2750# L = Safe bearing load in pounds

Eff = 80% S = Average penetration in inches of last 20 blows

$$L = \frac{2 \times .8 \times WH}{S + .1} = \frac{36080}{S + .1} \text{ pounds} = \frac{18.04}{S + .1} \text{ Tons}$$

Penetration Last 20 Blows	S	Safe Bearing (Tons)	Penetration Last 20 Blows	S	Safe Bearing (Tons)
0	0.00000	180.4	3	0.1500	72.2
1/8	0.00625	169.8	3 1/4	0.1625	68.7
1/4	0.01250	160.4	3 1/2	0.1750	65.6
3/8	0.01875	151.9	3 3/4	0.1875	62.7
1/2	0.02500	144.3	4	0.2000	60.1
5/8	0.03125	137.4	4 1/4	0.2125	57.7
3/4	0.03750	131.2	4 1/2	0.2250	55.5
7/8	0.04375	125.5	4 3/4	0.2375	53.5
1	0.05000	120.3	5	0.2500	51.5
1 1/8	0.05625	115.5	5 1/4	0.2625	49.8
1 1/4	0.06250	111.0	5 1/2	0.2750	48.1
1 3/8	0.06875	106.9	5 3/4	0.2875	46.6
1 1/2	0.07500	103.1	6	0.3000	45.1
1 5/8	0.08125	99.5	6 1/2	0.325	42.4
1 3/4	0.08750	96.2	7	0.350	40.1
1 7/8	0.09375	93.1	7 1/2	0.375	38.0
2	0.10000	90.2	8	0.400	36.1
2 1/4	0.1125	84.9	8 1/2	0.425	34.4
2 1/2	0.1250	90.2	9	0.450	32.8
2 3/4	0.1375	76.0	9 1/2	0.475	31.4

Penetration Last 20 Blows	S	Safe Bearing (Tons)	Penetration Last 20 Blows	S S	Safe Bearing (Tons)
10	0.500	30.1			
10 1/2	0.525	28.9			
11	0.550	27.8			
11 1/2	0.575	26.7			
12	0.600	25.8			
13	0.65	24.1			
14	0.70	22.6			
15	0.75	21.2			
16	0.80	20.0			
17	0.85	19.0			
18	0.90	18.0			
19	0.95	17.2			
20	1.00	16.4			

Table of bearing values in tons for the Mckierman-Terry DE-20 Diesel Hammer based on the-formula $P = \frac{2\,W\,H}{S + 0.1} \times \frac{1}{2{,}000 \text{ lbs.}} \times \frac{8}{10}$

P=Bearing in Tons; 4J=~leight of Hammer (2.,000 lbs.); H= Total drop in ft.; S=average penetration in inches for the last 20 blows; .1 is a constant for the formula; .8 is eighty percent of Manufacturers' rated energy output for open type hammers as set out in Specs. In calculating drop, add 3' to the drop visible (the distance the top of the hammer protrudes above the housing as shown on the indicator rod) to get the total drop.

Penetration Last 20 Blows	Penetration Per Blow	Bearing Values in Tons						
		H= 7'	H= 6 1/2'	H= 6'	H= 5 1/2'	H= 5'	H= 4 1/2'	H=4
1/8"	0.00625	105.4	97.8	90.4	82.8	75.3	67.8	60.2
1/4"	0.0125	99.5	92.4	85.3	78.2	71.1	64.0	56.9
3/8"	0.01875	94.3	87.6	80.8	74.1	67.4	60.6	53.9
1/2"	0.0250	89.6	83.2	76.8	70.4	64.0	57.6	51.2
5/8"	0.03125	85.3	79.2	73.1	67.0	60.9	54.8	48.8
3/4"	0.0375	81.4	75.6	69.8	64.0	58.2	52.4	46.5
7/8"	0.04375	77.9	72.3	66.8	61.2	55.7	50.1	44.5
1"	0.0500	74.6	69.3	64.0	58.7	53.3	48.0	42.7
1 1/8"	0.05625	71.7	66.5	61.4	56.3	51.2	46.1	41.0
1 1/4"	0.06250	68.9	64.0	59.1	54.2	49.2	44.3	39.4
1 3/8"	0.06875	66.4	61.6	56.9	52.1	47.4	42.7	37.9
1 1/2"	0.0750	64.0	59.4	54.9	50.3	45.7	41.1	36.6
1 5/8"	0.08125	61.8	57.3	53.0	48.6	44.1	39.7	35.3
1 3/4"	0.0875	59.7	55.5	51.2	46.9	42.7	38.4	34.1
1 7/8"	0.09375	57.8	53.7	49.5	45.4	41.3	37.2	33.0
2"	0.1000	56.0	52.0	48.0	44.0	40.0	36.0	32.0
2 1/4"	0.11250	52.7	48.9	45.2	41.4	37.6	33.9	30.1
2 1/2"	0.1250	49.8	46.2	42.7	39.1	35.6	32.0	28.4
2 3/4"	0.1375	47.1	43.8	40.4	37.0	33.7	30.3	26.9
3"	0.1500	44.8	41.6	38.4	35.2	32.0	28.8	25.6

Penetration Last 20 Blows	Penetration Per Blow	Bearing Values in Tons						
		H= 7'	H= 6 1/2'	H= 6'	H= 5 1/2'	H= 5'	H= 4 1/2'	H=4
3 1/4"	0.1625	42.7	39.6	36.6	33.5	30.5	27.4	24.4
3 1/2"	0.1750	40.7	37.8	34.9	32.0	29.1	26.2	23.3
3 3/4	0.1875	39.0	36.2	33.4	30.6	27.8	25.0	22.3
4"	0.2000	37.3	34.7	32.0	29.3	26.7	24.0	21.3
4 1/4"	0.2125	35.8	33.3	30.7	28.2	25.6	23.0	20.5
4 1/2"	0.2250	34.5	32.0	29.5	27.0	24.6	22.1	19.7
4 3/4"	0.2375	33.2	30.8	28.4	26.1	23.7	21.3	19.0
5"	0.2500	32.0	29.7	27.4	25.1	22.8	20.6	18.3
5 1/4"	0.2625	30.9	28.7	26.5	24.3	22.1	19.9	17.7
5 1/2"	0.2750	29.9	27.7	25.6	23.5	21.3	19.2	17.1
5 3/4"	0.2875	28.9	26.8	24.8	22.7	20.6	18.6	16.5
6"	0.3000	28.0	26.0	24.0	22.0	20.0	18.0	16.0
6 1/4"	0.3125	27.2	25.2	23.3	21.3	19.4	17.5	15.5
6 1/2"	0.3250	26.4	24.5	22.6	20.7	18.8	16.9	15.1

VULCAN #1 Hammer

W = 5000 lbs. H = 3.00 feet

$$P = \frac{2\,W\,H}{S + 0.1}$$

P = safe bearing in pounds
S = Ave. penetration in inches of last 20 blows

Penetration (in) last 20 blows	S(in)	Safe Bearing (Tons)	Penetration (in) last 20 blows	S(in)	Safe Bearing (Tons)
1/8	.00625	141.2	4 1/2	.2250	46.2
1/4	.01250	133.3	4 3/4	.2375	44.4
3/8	.01875	126.3	5"	.2500	~~42.4~~ 42.9
1/2	.02500	120.0	5 1/4	.2625	41.4
5/8	.03125	114.3	5 1/2	.2750	40.0
3/4	.03750	109.1	5 3/4	.2875	38.7
7/8	.04375	104.3	6"	.3000	37.5
1"	.05000	100.0	6 1/2	.325	35.3
1 1/8	.05625	96.0	7"	.350	33.3
1 1/4	.06250	92.3	7 1/2	.375	31.6
1 3/8	.06875	88.9	8"	.400	30.0
1 1/2	.07500	85.7	8 1/2	.425	28.6
1 5/8	.08125	82.8	9"	.450	27.3
1 3/4	.08750	80.0	9 1/2	.475	26.1
1 7/8	.09375	77.4	10"	.500	25.0
2"	.10000	75.0	11"	.550	23.0
2 1/4	.11250	70.6	12"	.600	21.4
2 1/2	.12500	66.7	13"	.650	20.0
2 3/4	.13750	63.2	14"	.700	18.75
3"	.15000	60.0	15"	.750	17.6
3 1/4	.1625	57.1	16"	.800	16.7
3 1/2	.1750	54.5	17"	.850	15.8
3 3/4	.1875	52.2	18"	.900	15.0
4"	.2000	50.0	19"	.950	14.3
4 1/4	.2125	48.0	20"	1.000	13.6

VULCAN #2: $P = \frac{2\,W\,H}{S + 0.1} = \frac{2 \times 3000 \times 2.42}{S + 0.1} = \frac{14520}{S + 0.1}$ = safe bearing in pounds

or $\frac{7.26}{S + 0.1}$ = safe bearing in tons.

Penetration in last 20 blows	S	Safe Bearing in Tons	Penetration in last 20 blows	S	Safe Bearing in Tons
0	0.00000	72.6	3 1/2"	0.175	26.4
1/8 "	0.00625	68.3	3 3/4	0.1875	25.3
3/16	0.009375	66.4	4	0.2	24.2
1/4	0.0125	64.5	4 1/4	0.2125	23.2
3/8	0.01875	61.1	4 1/2	0.225	22.3
1/2	0.025	58.1	4 3/4	0.2375	21.5
5/8	0.03125	55.3	5	0.25	20.7
3/4	0.0375	52.8	5 1/4	0.2625	20.0
7/8	0.04375	50.5	5 1/2	0.275	19.4
			5 3/4	0.2875	18.7
1	0.05	48.4	6	0.3	18.15
			6 1/4		17.6
1 1/8	0.05625	46.5	6 1/2	0.325	17.1
			6 3/4		16.6
1 1/4	0.0625	44.7	7	0.35	16.1
			7 1/4		15.7
1 3/8	0.06875	43.0	7 1/2	0.375	15.3
1 1/2	0.075	41.5	8	0.4	14.5
1 5/8	0.08125	40.1	8 1/2	0.425	13.8
1 3/4	0.0875	38.7	9	0.45	13.2
1 7/8	0.09375	37.5	9 1/2	0.475	12.6
2	0.1	36.3	10	0.50	12.1
2 1/8		35.2	10 1/2		11.6
2 1/4	0.1125	34.2	11	0.55	11.2
2 3/8		33.2			
2 1/2	0.125	32.3	12	0.60	10.4
2 3/4	0.1375	30.6	13	0.65	9.7
3	0.15	29.0	14	0.70	9.1
3 1/4	0.1625	27.7	15	0.75	8.5
			16		8.1
			17		7.6
			18		7.3
			19		6.9

McKiernan-Terry DE 30

Bearing (Tons) $\frac{2\ WH}{s + 0.1} \times \frac{1}{2000} \times \frac{8}{10}$ W = 2800

(Original) Sheet #1

Penetration test 20 Blow	S Pene. Blow	2.5	3	3.5	4	4.5	5	5.5	6	6.5	7	7.5
1/8	0.00625	52.7	63.2	73.8	84.3	94.9	105.4	116.0	126.5	137.0	147.5	158.1
1/4	.0125	49.8	59.7	69.7	79.6	89.6	99.6	109.5	119.5	129.4	139.4	149.3
3/8	.01875	47.2	56.6	66.0	75.5	84.9	94.3	103.7	113.2	122.6	132.0	141.4
1/2	.025	44.8	53.8	62.7	71.7	80.6	89.6	98.6	107.5	116.5	125.4	134.4
5/8	.03125	42.7	51.2	59.7	68.3	76.8	85.3	93.9	102.4	110.9	119.5	128.0
3/4	.0375	40.7	48.9	57.0	65.2	73.3	81.5	89.6	97.7	105.9	114.0	122.2
7/8	.04375	38.9	46.7	54.5	62.3	70.1	77.9	85.7	93.5	101.3	109.1	116.29
1	.05	37.3	44.8	52.3	59.7	67.2	74.7	82.1	89.6	97.1	104.5	112.0
1 1/8	.05625	35.8	43.0	50.2	57.3	64.5	71.7	78.8	86.0	93.2	100.4	107.5
1 1/4	.0625	34.5	41.4	48.2	55.1	62.0	68.9	75.8	82.7	89.6	96.5	103.24
1 3/8	.06875	33.2	39.8	46.5	53.1	59.7	66.4	73.0	79.6	86.3	92.9	99.5
1 1/2	.07500	32.0	38.4	44.8	51.2	57.6	64.0	70.4	76.8	83.2	89.6	96.0
1 5/8	.08125	30.9	37.1	43.3	49.4	55.6	61.8	68.0	74.2	80.3	86.5	92.87
1 3/4	.08750	29.9	35.8	41.8	47.8	53.8	59.7	65.7	71.7	77.7	83.6	89.6
1 7/8	.09375	28.9	34.7	40.5	46.2	52.0	57.8	63.6	69.4	75.1	80.9	86.7
2	0.10	28.0	33.6	39.2	44.8	50.4	56.0	61.6	67.2	72.8	78.4	84.0
2 1/4	0.1125	26.4	31.6	36.9	42.2	47.4	52.7	58.0	63.2	68.5	73.8	79.6
2 1/2	0.1250	24.9	29.9	34.8	39.8	44.8	49.8	54.8	59.7	64.7	69.7	74.87
2 3/4	0.1375	23.6	28.3	33.0	37.7	42.4	47.2	51.9	56.6	61.3	66.0	70.7
3	0.15	22.4	26.9	31.4	35.8	40.3	44.8	49.3	53.8	58.2	62.7	67.2
3 1/4	0.1625	21.3	25.6	29.9	34.1	38.4	42.7	46.9	51.2	55.5	59.7	64.0
3 1/2	0.1750	20.4	24.4	28.5	32.6	36.7	40.7	44.8	48.9	52.9	57.0	61.1
3 3/4	0.1875	19.5	23.4	27.3	31.2	35.1	39.0	42.9	46.7	50.6	54.5	58.4
4	0.20	18.7	22.4	26.1	29.9	33.6	37.3	41.1	44.8	48.5	52.3	56.0
4 1/4	0.2125	17.9	21.5	25.1	28.7	32.3	35.8	39.4	43.0	46.6	50.2	53.7

Sheet #2

Penetration Lost 20 Blow	S Pene. Blow	2.5	3	3.5	4	4.5	5	5.5	6	6.5	7	7.5
4 1/2	0.225	17.2	20.7	24.1	27.6	31.0	34.5	37.9	41.4	44.8	48.2	51.7
4 3/4	0.2375	16.6	19.9	23.2	26.5	29.9	33.2	36.5	39.8	43.1	46.5	49.8
5	0.25	16.0	19.2	22.4	25.6	28.8	32.0	35.2	38.4	41.6	44.8	48.0
5 1/4	0.2625	15.4	18.5	21.6	24.7	27.8	30.9	34.0	37.1	40.2	43.3	46.3
5 1/2	0.275	14.9	17.9	20.9	23.9	26.9	29.9	32.9	35.8	38.8	41.8	44.8
5 3/4	0.2875	14.5	17.3	20.2	23.1	26.0	28.9	31.8	34.7	37.6	40.5	43.4
6	0.30	14.0	16.8	19.6	22.4	25.2	28.0	30.8	33.6	36.4	39.2	42.0
6 1/4	0.3125	13.6	16.3	19.0	21.7	24.4	27.2	29.9	32.6	35.3	38.0	40.7
6 1/2	0.325	13.2	15.8	18.4	21.1	23.7	26.4	29.0	31.6	34.3	36.9	39.5
6 3/4	0.3375	12.8	15.4	17.9	20.5	23.0	25.6	28.2	30.7	33.3	35.8	38.4
7	0.35	12.4	14.9	17.4	19.9	22.4	24.9	27.4	29.9	32.4	34.8	37.3
7 1/2	0.375	11.8	14.1	16.5	18.9	21.2	23.6	25.9	28.3	30.7	33.0	35.4
8	0.40	11.2	13.4	15.7	17.9	20.2	22.4	24.6	26.9	29.1	31.4	33.6
8 1/2	0.425	10.7	12.8	14.9	17.1	19.2	21.3	23.5	25.6	27.7	29.9	32.0
9	0.45	10.2	12.2	14.3	16.3	18.3	20.4	22.4	24.4	26.5	28.5	30.5
9 1/2	0.475	9.7	11.7	13.6	15.6	17.5	19.5	21.4	23.4	25.3	27.3	29.2
10	0.50	9.3	11.2	13.1	14.9	16.8	18.7	20.5	22.4	24.3	26.1	28.0
10 1/2	0.525	9.0	10.8	12.5	14.3	16.1	17.9	19.7	21.5	23.3	25.1	26.[illegible]
11	0.55	8.6	10.3	12.1	13.8	15.5	17.2	19.0	20.7	22.4	24.1	25.[illegible]
11 1/2	0.575	8.3	10.0	11.6	13.3	14.9	16.6	18.3	19.9	21.6	23.2	24.[illegible]
12	0.60	8.0	9.6	11.2	12.8	14.4	16.0	17.6	19.2	20.8	22.4	24.0
12 1/2	0.625	7.7	9.3	10.8	12.4	13.9	15.4	17.0	18.5	20.1	21.6	23.[illegible]
13	0.65	7.5	9.0	10.5	11.9	13.4	14.9	16.4	17.9	19.4	20.9	22.4
14	0.70	7.0	8.4	9.8	11.2	12.6	14.0	15.4	16.8	18.2	19.6	21.0

on hand

Sheet # 3

Penetration Lost 20 Blow	S Pene. Blow	2.5	3	3.5	4	4.5	5	5.5	6	6.5	7	7.5
15	0.75	6.6	7.9	9.2	10.5	11.9	13.2	14.5	15.8	17.1	18.4	19.8
16	0.80	6.2	7.5	8.7	10.0	11.2	12.4	13.7	14.9	16.2	17.4	18.7
17	0.85	5.9	7.1	8.3	9.4	10.6	11.8	13.0	14.1	15.3	16.5	17.7
18	0.90	5.6	6.7	7.8	9.0	10.1	11.2	12.3	13.4	14.6	15.7	16.8
19	0.95	5.3	6.4	7.5	8.5	9.6	10.7	11.7	12.8	13.9	14.9	16.0
20	1.00	5.1	6.1	7.1	8.1	9.2	10.2	11.2	12.2	13.2	14.3	15.3
21	1.05	4.9	5.8	6.8	7.8	8.8	9.7	10.7	11.7	12.7	13.6	14.6
22	1.10	4.7	5.6	6.5	7.5	8.4	9.3	10.3	11.2	12.1	13.1	14.0
23	1.15	4.5	5.4	6.3	7.2	8.1	9.0	9.9	10.8	11.6	12.5	13.4
24	1.20	4.3	5.2	6.0	6.9	7.8	8.6	9.5	10.3	11.2	12.1	12.9

Cid by HMB

DROP HAMMER

$$W = 2080 \text{ lbs.},\ H = 15 \text{ ft.}\quad \frac{2\,W\,H}{S + 1.0} = \frac{2 \times 2080 \times 15}{S + 1.0} = \frac{62400 \text{ lbs.}}{S + 1.0} = \frac{31.2}{S + 1.0} \text{ Tons}$$

Inches Penetration last 5 blows	S	Bearing (Tons)
0	0.00	31.2
1/4	0.05	29.7
1/2	0.10	28.4
3/4	0.15	27.1
1	0.20	26.0
1-1/4	0.25	25.0
1-1/2	0.30	24.0
1-3/4	0.35	23.1
2	0.40	22.3
2-1/4	0.45	21.5
2-1/2	0.50	20.8
2-3/4	0.55	20.1
3	0.60	19.5
3-1/4	0.65	18.9
3-1/2	0.70	18.4
3-3/4	0.75	17.8
4	0.80	17.3
4-1/4	0.85	16.9
4-1/2	0.90	16.4
4-3/4	0.95	16.0
5	1.00	15.6
5-1/4	1.05	15.2
5-1/2	1.10	14.9
5-3/4	1.15	14.5
6	1.20	14.2
6-1/4	1.25	13.9
6-1/2	1.30	13.6
6-3/4	1.35	13.3
7	1.40	13.0
7-1/4	1.45	12.7
7-1/2	1.50	12.5
7-3/4	1.55	12.2
8	1.60	12.0
8-1/2	1.70	11.6
9	1.80	11.1
9-1/2	1.90	10.8
10	2.00	10.4
10-1/2	2.10	10.1
11	2.20	9.8
11-1/2	2.30	9.5
12	2.40	9.2
12-1/2	2.50	8.9
13	2.60	8.7
13-1/2	2.70	8.4
14	2.80	8.2
14-1/2	2.90	8.0
15	3.00	7.8

INDIANA STATE HIGHWAY COMMISSION

DIVISION OF CONSTRUCTION

ORDER FOR PILING

Contract No._____ Piling Order No._____

Project No._____ Date_____

Structure No._____

To_____
Contractor

_____

_____

This will be your authority to deliver to the site of the above mentioned structure

_____" concrete piles
treated timber piles
untreated timber piles
_____" steel H piles
_____" steel pile shells
} as listed below.

_____ piles, each _____ feet long.
Number Length

_____ piles, each _____ feet long.
Number Length

The tabulation of all piles ordered is as follows:

This order _____ piles, whose accumulated length is _____ Lin. Ft.
Number Length

Prev. ordered _____ piles, whose accumulated length is _____ Lin. Ft.
Number Length

Grand Total _____ piles, whose accumulated length is _____ Lin. Ft.
Number Length

Yours very truly,

_____

Title_____

ORIG. TO CONTRACTOR
DUP. TO CENT. OFFICE
TRIP. TO DIST. OFFICE
QUAD. TO PROJ. FILE

May 08, 2002

To: Tim Bertram, Chief
Contracts and Construction Division
Room 925 IGCN

Attention: Don Leonard
Bridge Engineer

Thru: Firooz Zandi, Chief
Materials and Tests Division

From: Athar Khan
Chief Geotechnical Engineer

Subject: INDOT – Correct Use of INDOT Dynamic Pile Driving Formula

Gentlemen:

Recently we have learned that INDOT dynamic formula for pile driving is not correctly used on some projects, when developing the ultimate capacity chart.

The contractors calculation for pile capacities were reviewed by us. During our review, it was noticed that the discrepancy in the ultimate capacity calculations was because they were carrying the square root over the entire term "E (log10N)". Hence, the numbers were incorrect.

During our discussion with the contractor, we were told that he was informed to take the square root of the entire term "E (log10N)" instead of just for the term "E" the manufacturer's rated energy. This is a big misunderstanding and needs to be corrected, so that a uniform policy is adopted for all INDOT projects.

We have given at least one presentation in each of the six districts of INDOT on pile driving in 1997. If the districts feel that there is a further need to educate our new personnel, we are prepared to give a presentation again.

Sometimes, we receive incomplete "Pile Driving Equipment Data" form from the contractor and with charts prepared using ENR formula attached with that request. The ENR formula is an outdated and unspecified method as per INDOT and it should not be used on INDOT projects. It is our suggestion that these forms should be forwarded to us after being reviewed by the INDOT Project Engineer.

We are presenting here, the INDOT method to calculate the ultimate pile capacity based on the Dynamic Formula as per Standard Specifications Section 701.06 (b).

Metric: $R_U = 7 (\sqrt{E}) (\log 10N) - 550$

English: $R_U = 0.5 [1.75 (\sqrt{E}) (\log 10N) - 100]$

Where R_U = The ultimate pile capacity in kilonewtons (tons)

E = The manufacturer's rated energy in joules (foot pounds) at the ram stroke observed in the field and not reduced for efficiency

log 10N = Logarithm to the base 10 of the quantity 10 multiplied by N, where N is the number of hammer blows per 25 mm (1 inch) at final penetration.

In addition, it is sometimes easier to calculate the number of hammer blows per 300 mm (1 foot) i.e. N_{PF} or per 25 mm (1 inch) i.e. N_{PI}.

$$N_{PF} = 12 \times (10^X)$$

$$N_{PI} = 10^X$$

$$X_{Metric} = \log (N) = [(R_U + 550)/7\sqrt{E}] - 1$$

$$X_{English} = \log (N) = [(2R_U + 100)/1.75\sqrt{E}] - 1$$

An example chart is attached for your reference. We would appreciate if you review this chart, and forward any comments to Mr. Mir Zaheer of the Materials and Tests Division.

Further, we are trying to arrange a Pile Driving Course for Inspectors through FHWA hopefully this year. This is targeted towards INDOT construction personnel who are involved with pile driving.

In future, if any question arises regarding pile hammers or pile driving formula, we at the Geotechnical Section of the Materials and Tests Division will be happy to assist in this regard.

Please feel free to contact us, if you have any further questions.

MZ/
cc: Mr. Rick Smutzer
Contracts and Construction Division – Attn: Field Engineers - Attachments
All District Directors – Attn: District Construction Engineer - Attachments
Mr. Mir Zaheer - Attachments
File
Attachments
H:\Mir\Letters\pile-formula-clarification.doc

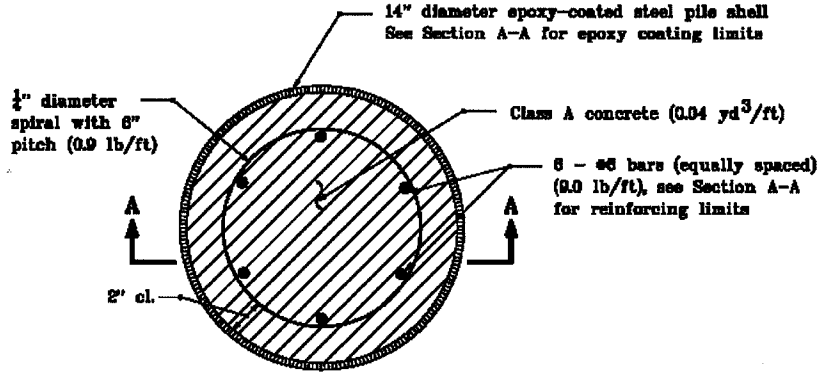

PLAN

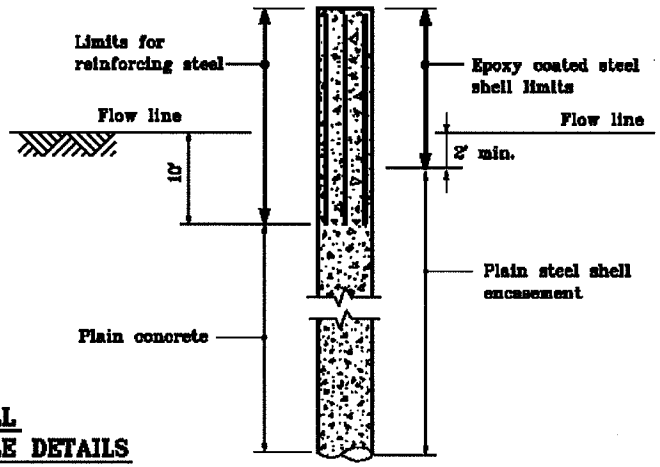

SECTION A-A

EPOXY COATED STEEL SHELL ENCASED REINFORCED CONCRETE PILE DETAILS

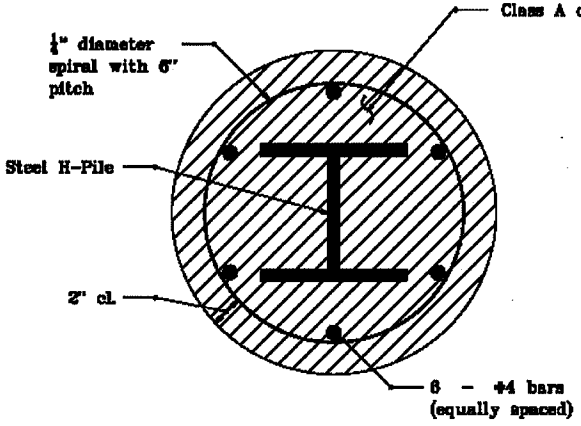

PLAN

TABLE OF MATERIALS

Steel H-Pile designation	Minimum pile diameter	Reinforcing steel lb/ft	Class A concrete yd³/ft
HP 14	2'-3	5.8	0.12
HP 12	2'-0	5.6	0.10
HP 10	1'-9	5.4	0.08

STEEL H - PILES REINFORCED CONCRETE ENCASED DETAIL

INDIANA DEPARTMENT OF TRANSPORTATION

REINFORCED CONCRETE PILE DETAILS

MAY 1998

STANDARD DRAWING NO. E 701-BPIL-02

ANTHONY L. DRAMOVICH No. 18095 STATE OF INDIANA PROFESSIONAL ENGINEER

DESIGN STANDARDS ENGINEER

DETAILS PLACED IN THIS FORMAT 11-15-99

/s/ Anthony L. Dramovich 5-25-99
DESIGN STANDARDS ENGINEER DATE

/s/ Firoz Sendi 5-25-99
CHIEF HIGHWAY ENGINEER DATE

ORIGINALLY APPROVED 5-26-99

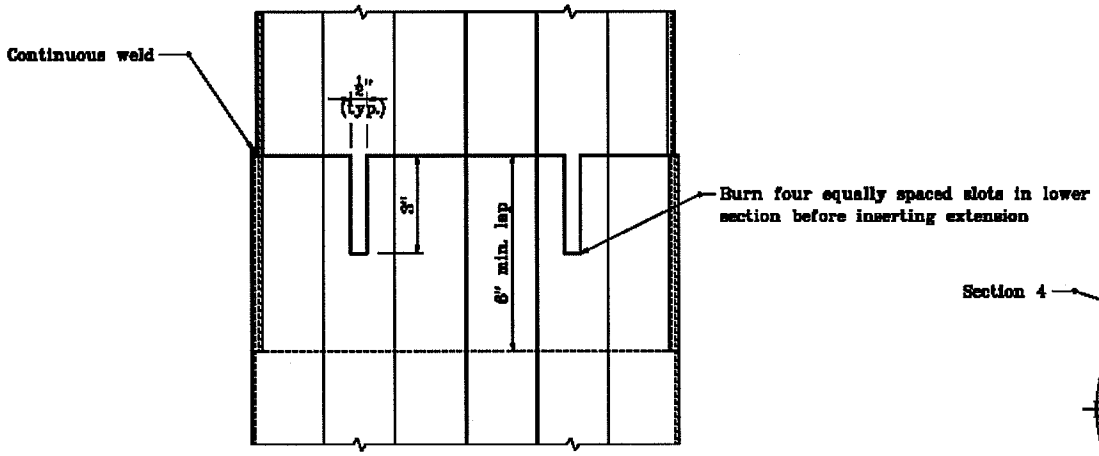

FOR FLUTED SHELLS

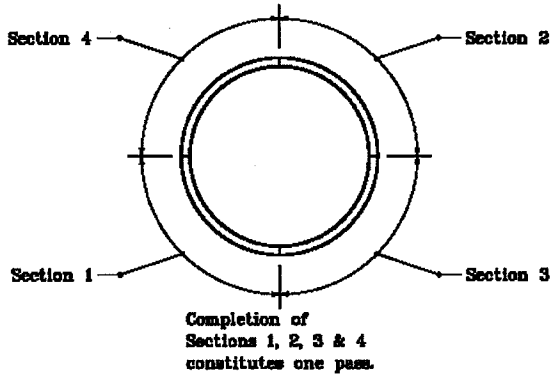

WELDING SEQUENCE

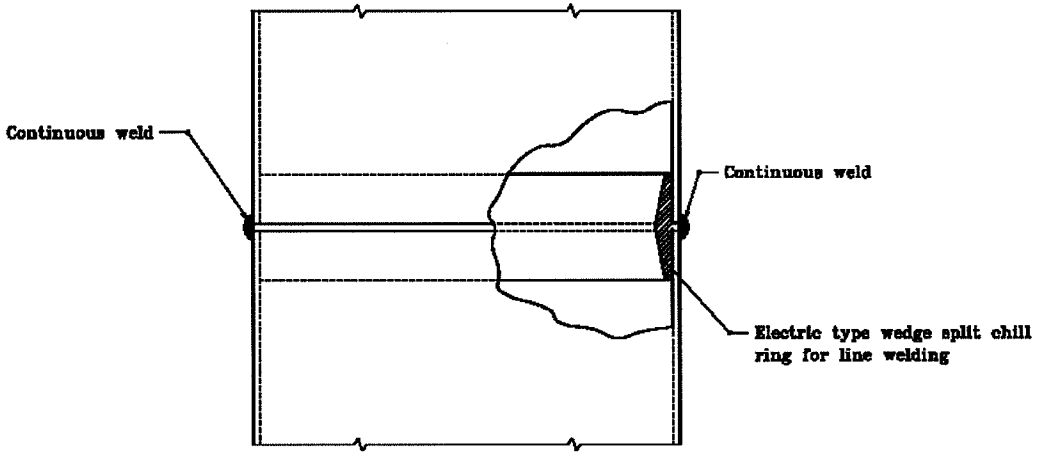

FOR ROUNDED PIPE

INDIANA DEPARTMENT OF TRANSPORTATION

SPLICING PILE SHELLS IN FIELD

SEPTEMBER 1994

STANDARD DRAWING NO. E 701-BPIL-04

DETAILS PLACED IN THIS FORMAT 11-15-99

/s/ Anthony L. Dramovich 11-15-99
DESIGN STANDARDS ENGINEER DATE

/s/ Firas Sandi 11-15-99
CHIEF HIGHWAY ENGINEER DATE

ORIGINALLY APPROVED 9-30-94

ANTHONY L. DRAMOVICH REGISTERED No. 18095 STATE OF INDIANA PROFESSIONAL ENGINEER
DESIGN STANDARDS ENGINEER

PROCEDURE FOR SPLICING PARTIALLY DRIVEN PILING

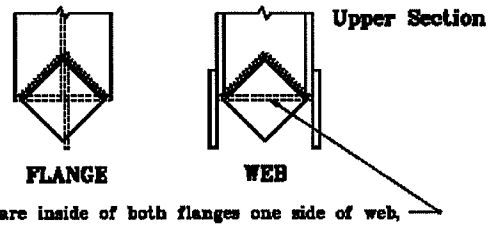

Prepare inside of both flanges one side of web, and weld on splice plates.

a.) Hold upper section in place with pile line, then plumb pile.

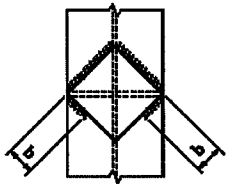

b.) Weld fillet for b = 2" on each outside corner of flange plates.

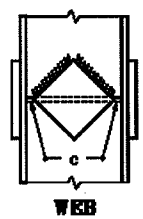

c.) Weld prepared butt joint for c = 1½" at each end of the web.

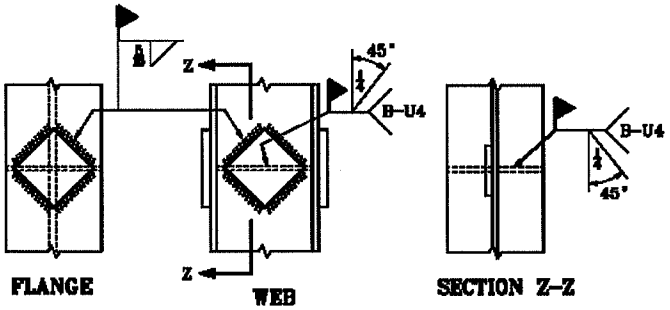

COMPLETED SPLICE

d.) Remove pile line and complete all welds.

NOTES :

1. PROCEDURE FOR SPLICING PILING BEFORE DRIVING

   Steel H piling may be spliced in a horizontal position prior to driving using splice plates and web and flange penetration welds as shown below. The welding sequence need not be followed provided the piling remains straight after welding.

2. Use ⅜ in. thick square plates and 5/16 in. fillet welds.

SPLICE PLATE DIMENSIONS & PLACEMENT

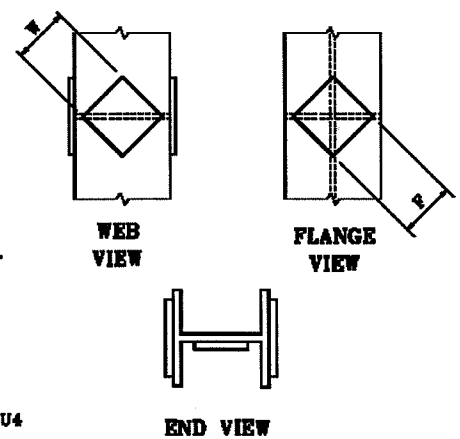

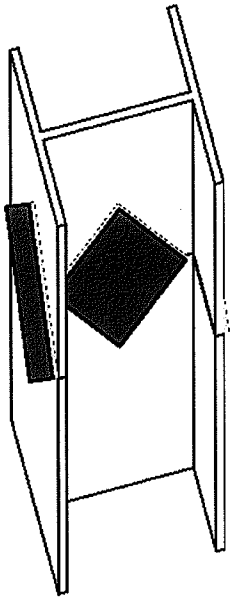

COMPLETED SPLICE ISOMETRIC

SPLACE PLATE DIMENSIONS

H-PILE SIZE	HP 10	HP 12	HP 14
FLANGE – F	7"	8¼"	10¼"
WEB – W	5½"	6¾"	8"

INDIANA DEPARTMENT OF TRANSPORTATION

STEEL H-PILE SPLICE PROCEDURE

MAY 1998

STANDARD DRAWING NO. E 701-BPIL-05

ANTHONY L. URBANOVICH REGISTERED No. 18095 STATE OF INDIANA PROFESSIONAL ENGINEER

DESIGN STANDARDS ENGINEER

DETAILS PLACED IN THIS FORMAT 11-15-99

/s/ Anthony L. Urbanovich 11-15-99
DESIGN STANDARDS ENGINEER DATE

/s/ Firoze Zandi 11-15-99
CHIEF HIGHWAY ENGINEER DATE
ORIGINALLY APPROVED 5-21-99

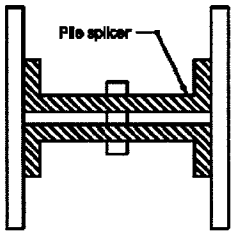

PLAN

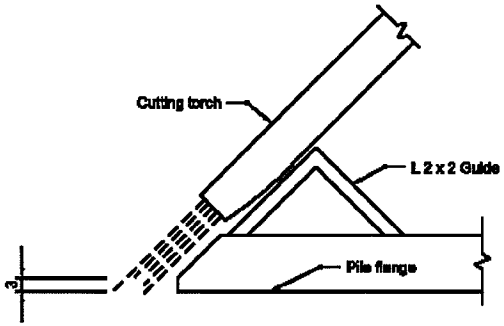

SUGGESTED METHOD
TO BEVEL FLANGE

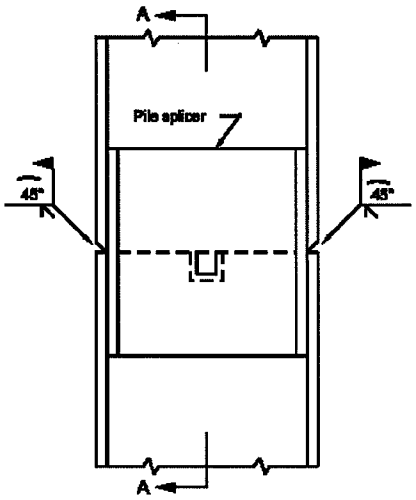

ELEVATION

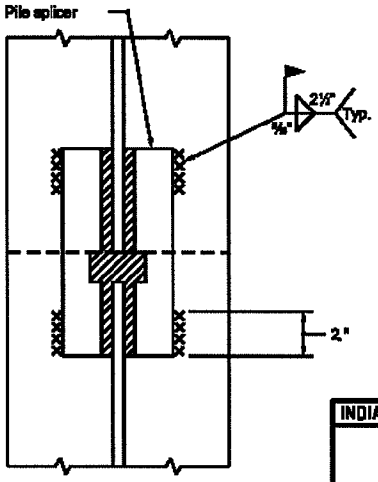

SECTION A-A

ALTERNATE STEEL H PILE SPLICE
USING COMMERCIAL PILE SPLICER

INDIANA DEPARTMENT OF TRANSPORTATION

ALTERNATE STEEL
H-PILE SPLICE

SEPTEMBER 2003

STANDARD DRAWING NO. E 701-BPIL-08

RICHARD L. VANCLEAVE
No. 9750
STATE OF INDIANA
PROFESSIONAL ENGINEER

DESIGN STANDARDS ENGINEER

/s/ Richard L. VanCleave 9-26-03
DESIGN STANDARDS ENGINEER DATE

/s/ Thomas L. Snyder 9-26-03
CHIEF HIGHWAY ENGINEER DATE

Form IC 225

State Form 4287

INDIANA DEPARTMENT OF TRANSPORTATION

FCR Page

Contract NO.

Structure NO.

Project NO.

Type Station

PILE DRIVING RECORD

Date

Record NO.

For.

Type Name

STR #

WEIGHT OF HAMMER

Type Hammer

Found. and Pile Number	Length Put in Leads Meters	Length Cut off Meters	Length Below Cut off Meters	TOTAL PENETRATION LAST 20 BLOWS	Drop in Meters	Bearing Value in Kn	Remarks Bearing Required, Etc
				Totals This Report			
				Totals Last Report			
				Totals To Date			Allowable Splices

Signed _____

Title _____