4 MIX DESIGN

Mix Characteristics and Behavior

Bulk Specific Gravity or Density
Air Voids
Voids in the Mineral Aggregates
Voids Filled with Asphalt
Binder Content
Plant Produced HMA

Properties Considered in Mix Design

Stability
Durability
Impermeability
Workability
Flexibility
Fatigue Resistance

Superpave Mix Design Method

Aggregates
Superpave Specimens
Maximum Specific Gravity
Bulk Specific Gravity -- Dense Graded Mixtures and SMA
Bulk Specific Gravity -- Open Graded Mixtures
Dust Proportion
Air Voids
Voids in the Mineral Aggregate
Voids Filled with Asphalt
Recycled Materials
Moisture Susceptibility
Example Calculations

Stone Matrix Asphalt

CHAPTER FOUR
MIX DESIGN

In Hot Mix Asphalt, binder and aggregate are blended together in precise proportions. The relative proportions of these materials determine the physical properties of the HMA and ultimately how the HMA performs as a finished pavement. The design method for determining the suitable proportions of binder and aggregate in the HMA is the Superpave Method.

MIX CHARACTERISTICS AND BEHAVIOR

When a sample of HMA is prepared in the laboratory, the HMA is analyzed to determine the probable performance in a pavement structure. The analysis focuses on five characteristics of the HMA and the influence those characteristics are likely to have on HMA behavior. The five characteristics are:

1) Mix Density

2) Air Voids

3) Voids in the Mineral Aggregate (VMA)

4) Voids Filled with Asphalt (VFA)

5) Binder Content

Before mix properties are discussed in detail, the Technician is required to understand that paving mix properties are most affected by volume and not weight; however, production and testing of HMA is by weight. An example of the difference between weight and volume of HMA is given in Figure 4-1. Much of what determines long term pavement performance of the HMA, such as Air Voids, VMA and VFA, are based on volume not weight.

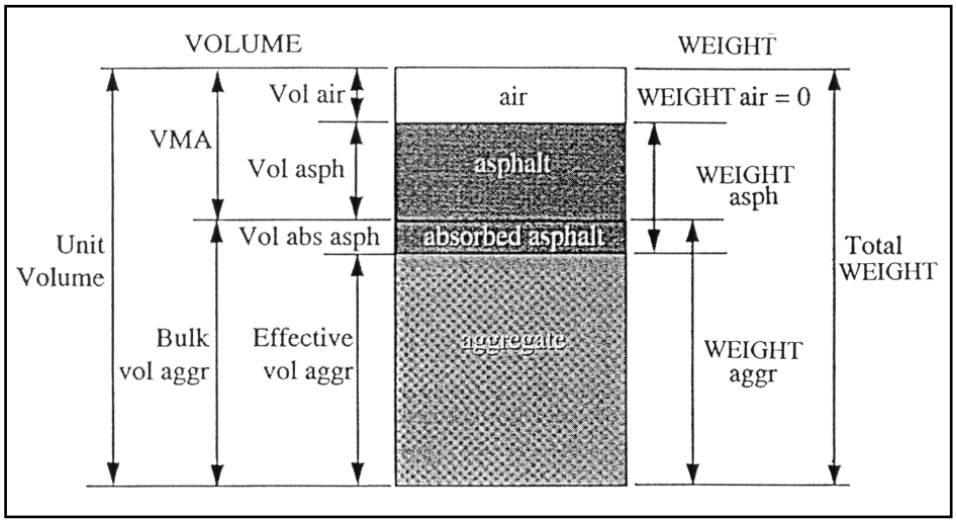

Figure 4-1. Component Diagram of Compacted Sample of Hot Mix Asphalt

BULK SPECIFIC GRAVITY OR DENSITY

The density of the compacted mix is the unit weight of the mixture (the weight of a specific volume of HMA). Density is important because proper density in the finished product is essential for lasting pavement performance. Mix properties are required to be measured in volumetric terms as well as weight. Density allows us to convert from units of weight to volume. In mix design testing and analysis, density of the compacted specimen is usually expressed in pounds per cubic foot (lb/ft^3).

AIR VOIDS

Air voids are small air spaces or pockets of air that occur between the coated aggregate particles in the final compacted HMA. A certain percentage of air voids is necessary in all dense-graded mixes to prevent the pavement from flushing, shoving, and rutting.

Air voids may be increased or decreased by lowering or raising the binder content. They may also be increased or decreased by controlling the amount of material passing the No. 200 sieve in the HMA. The more fines added to the HMA generally the lower the air voids. If a plant has a baghouse dust collection system, the air voids may be controlled by the amount of fines which are returned to the HMA. Finally, the air voids may be changed by varying the aggregate gradation in the HMA.

The durability of an asphalt pavement is a function of the air void content. Too high an air void content provides passageways through the HMA for the entrance of damaging air and water. Too low an air void content, on the other hand, may lead to flushing, a condition where excess binder squeezes out of the HMA to the surface.

Density and air void content are directly related. The higher the density, the lower the percentage of air voids in the HMA. Specifications require pavement densities that produce the proper amount of air voids in the pavement.

VOIDS IN THE MINERAL AGGREGATES

Voids in the mineral aggregate (VMA) are the void spaces that exist between the aggregate particles in the compacted paving HMA, including the space filled with the binder.

VMA represents the space that is available to accommodate the effective volume of binder (i.e., all of the binder except the portion lost by absorption into the aggregate) and the volume of air voids necessary in the HMA. The more VMA in the dry aggregate, the more space is available for the binder. Since a thick binder film on the aggregate particles results in a more durable HMA, specific minimum requirements for VMA are recommended and specified as a function of the aggregate size. Figure 4-2 illustrates VMA.

Minimum VMA values are required so that a durable binder film thickness may be achieved. Increasing the density of the HMA by changing the gradation of the aggregate may result in minimum VMA values with thin films of binder and a dry looking, low durability HMA. Therefore, economizing in binder content by lowering VMA is actually counter-productive and detrimental to pavement quality. Low VMA mixes are also very sensitive to slight changes in binder. If binder content varies even slightly during production, the air voids may fill with binder resulting in a pavement that flushes and ruts.

VMA is most affected by the fine aggregate fractions which pass the No. 200 sieve. The reason for this is that these particles tend to be absorbed by the binder film. Because they take up volume, there is a tendency to bulk (extend) the binder resulting in a lower VMA.

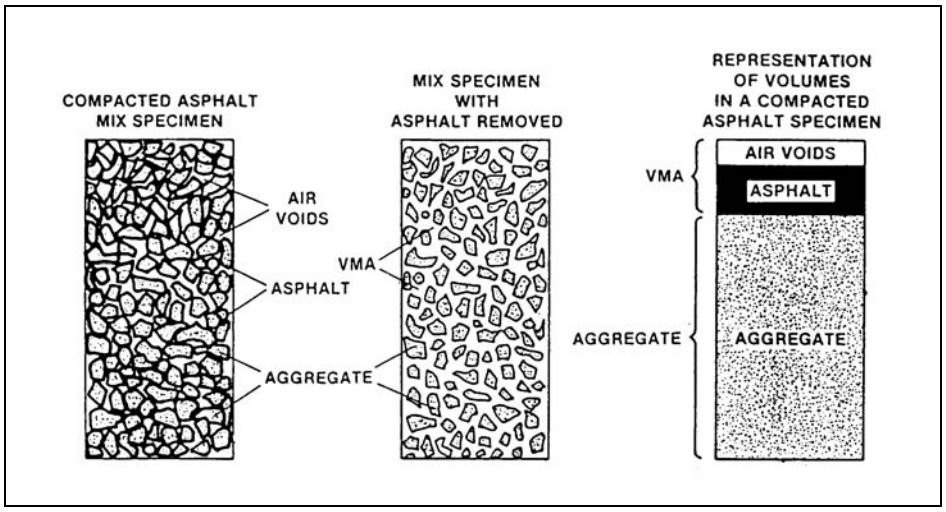

Figure 4-2. Illustration of VMA in a Compacted Sp
(For simplification, the volume of absorbed binder is not shown)

VOIDS FILLED WITH ASPHALT

Voids filled with asphalt (VFA) are the void spaces that exist between the aggregate particles in the compacted paving HMA that are filled with binder. VFA is expressed as a percentage of the VMA that contains binder.

Including the VFA requirement in a mix design helps prevent the design of HMA with marginally acceptable VMA. The main effect of the VFA is to limit maximum levels of VMA and subsequently maximum levels of binder content.

VFA also restricts the allowable air void content for HMA that are near the minimum VMA criteria. HMA designed for lower traffic volumes may not pass the VFA requirement with a relatively high percent air voids in the field even though the air void requirement range is met. The purpose for the VFA is to avoid less durable HMA resulting from thin films of binder on the aggregate particles in light traffic situations.

HMA designed for heavy traffic may not pass the VFA requirement with a relatively low percent of air voids in the field even though the amount of air voids is within the acceptable range. Because low air void contents may be very critical in terms of permanent deformation, the VFA requirement helps to avoid those mixes that are susceptible to rutting in heavy traffic situations.

BINDER CONTENT

The proportion of binder in the HMA is critical and is required to be accurately determined in the laboratory and then precisely controlled at the plant. The binder content for a particular HMA is established by the mix design.

The optimum binder content of the HMA is highly dependent on aggregate characteristics such as gradation and absorptiveness. Aggregate gradation is directly related to optimum binder content. The finer the HMA gradation, the larger the total surface area of the aggregate, and the greater the amount of binder required to uniformly coat the particles. Conversely, because coarser HMA has less total aggregate surface area, the aggregates require less binder. This is why surface HMA requires more binder than base HMA.

The relationship between aggregate surface area and optimum binder content is most pronounced where very fine aggregate fractions which pass through the No. 200 sieve exist, such as baghouse fines. Baghouse fines in HMA may act as a binder extender resulting in lower air voids in the HMA and possible flushing. If the binder content is reduced to stop the flushing, the HMA may become dry and brittle. This is because the baghouse fines increase the viscosity of the binder changing the rheological properties. Variations in the amount of fines may cause changes in HMA properties creating a very inconsistent HMA from the standpoint of appearance and performance. When this occurs, proper sampling and testing is required to be done to determine the cause of the variations and to establish a new mix design, if necessary.

The absorptiveness (ability to absorb binder) of the aggregate used in the HMA is critical in determining optimum binder content. Enough binder is required to be added to the HMA to allow for absorption and also coat the particles with an adequate film. Total binder content and effective binder content are the terms normally used.

Total binder content is the amount of the binder that is required to be added to the HMA to produce the desired HMA qualities. Effective binder content is the volume of binder not absorbed by the aggregate, i.e., the amount of binder that effectively forms a bonding film on the aggregate surfaces. Effective binder content is calculated based on the aggregate bulk specific gravity (Gsb) and the aggregate effective specific gravity (Gse). The higher the aggregate absorption, the greater the difference between Gse and Gsb.

Effective binder content should not be confused with the extracted binder content of the HMA. The effective binder content is a theoretical calculated value and the extracted binder content is an actual test value such as obtained for example with an ignition oven or vacuum extractor.

PLANT PRODUCED HMA

HMA characteristics are determined in a lab mix design to ensure that the combination of aggregates and binder meet Specification criteria and give long term performance; however, there may be subtle differences between the laboratory designed HMA and what is actually produced by the mixing plant. Plant type and environmental controls all have an effect on the HMA properties and may produce HMA with different characteristics than those designed in the lab. For these reasons, specimens are prepared by the Technician from plant produced HMA to verify proper density, air voids and VMA from the original laboratory design.

PROPERTIES CONSIDERED IN MIX DESIGN

Good HMA pavements function well because they are designed, produced and placed in such a way as to give them certain desirable properties. There are several properties that contribute to the quality of HMA pavements. They include stability, durability, impermeability, workability, flexibility, and fatigue resistance.

Ensuring that HMA has each of these properties is a major goal of the mix design procedure. Therefore, the Technician is required to be aware what each of the properties measures, how the property is evaluated, and what the property means in terms of pavement performance.

STABILITY

Stability of a HMA pavement is the ability of the mixture to resist shoving and rutting under loads (traffic). A stable pavement maintains the shape and smoothness required under repeated loading; an unstable pavement develops ruts (channels), ripples (washboarding or corrugation), raveling and other signs of shifting of the HMA.

Because stability for a pavement depends on the traffic expected to use the pavement, stability may be established only after a thorough traffic analysis. Stability is required to be high enough to handle traffic adequately, but not higher than traffic conditions required.

The stability of a mix depends on internal friction and cohesion. Internal friction among the aggregate particles (inter-particle friction) is related to aggregate characteristics such as shape and surface texture. Cohesion results from the bonding ability of the binder. A proper degree of both internal friction and cohesion in HMA prevents the aggregate particles from being moved past each other by the forces exerted by traffic.

In general, the more angular the shape of the aggregate particles and the more rough their surface texture, the higher the stability of the HMA. The binding force of a HMA is called cohesion. Cohesion increases with increasing loading (traffic) rate. Cohesion also increases as the viscosity of the binder increases, or as the pavement temperature decreases. Additionally, cohesion increases with increasing binder content, up to a certain point. Past that point, increasing the binder content creates too thick a film on the aggregate particles, resulting in loss of interparticle friction. Insufficient stability in a pavement has many causes and effects. Figure 4-3 lists some of them.

LOW STABILITY	
Causes	**Effects**
Excess binder in HMA	Washboarding, rutting, and flushing or bleeding
Excess medium size sand in HMA	Tenderness during rolling and for a period after construction, and difficulty in compacting
Rounded aggregate, little or no crushed surfaces	Rutting and channeling

Figure 4-3. Causes and Effects of Pavement Instability

DURABILITY

The durability of a HMA pavement is the ability of the HMA pavement to resist changes in the binder oxidation and disintegration of the aggregate. These factors may be the result of weather, traffic, or a combination of the two.

Generally, durability of a HMA may be enhanced by three methods. They are: using maximum binder content, using a sound aggregate, and designing and compacting the HMA for maximum impermeability.

Maximum binder content increases durability because thick binder films do not age and harden as rapidly as thin films. Consequently, the binder retains the original characteristics longer. Also, maximum binder content effectively seals off a greater percentage of interconnected air voids in the pavement, making the penetration of water and air difficult. A certain percentage of air voids is required to be left in the pavement to allow for expansion of the binder in hot weather.

A dense gradation of sound, tough aggregate contributes to pavement durability by providing closer contact between aggregate particles that enhances the impermeability of the HMA, and resists disintegration under traffic.

A lack of sufficient durability in a pavement may have several causes and effects. Figure 4-4 presents a list of some of them.

POOR DURABILITY	
Causes	**Effects**
Low binder content	Dryness or ravelling
High void content through design or lack of compaction	Early hardening of binder followed by cracking or disintegration
Water susceptible (hydrophillic) aggregate in HMA	Films of binder strip from aggregate leaving an abraded, ravelled, or mushy pavement

Figure 4-4. Causes and Effects of Lack of Durability

IMPERMEABILITY

Impermeability is the resistance of a HMA pavement to the passage of air and water into or through the mixture. This characteristic is related to the void content of the compacted HMA, and much of the discussion on voids in the mix design relates to the impermeability. Even though void content is an indication of the potential for passage of air and water through a pavement, the character of these voids is more important than the number of voids. The size of the voids, whether or not the voids are interconnected, and the access of the voids to the surface of the pavement all determine the degree of impermeability.

Although impermeability is important for the durability of a compacted paving HMA, virtually all HMA used in highway construction is permeable to some degree. This is acceptable as long as the permeability is within specified limits. Causes and effects of poor impermeability values in normal dense-graded HMA pavements are shown in Figure 4-5.

MIX TOO PERMEABLE	
Causes	**Effects**
Low binder content	Thin binder films that causes early aging and ravelling
High void content in design HMA	Water and air may easily enter pavement causing oxidation and disintegration
Inadequate compaction	Results in high voids in pavement leading to water infiltration and low strength

Figure 4-5. Causes and Effects of Permeability

WORKABILITY

Workability describes the ease with which a paving HMA may be placed and compacted. Workability may be improved by changing mix design parameters, aggregate sources, and/or gradation.

Harsh HMA (HMA containing a high percentage of coarse aggregate) has a tendency to segregate during handling and also may be difficult to compact. Through the use of trial mixes in the laboratory, additional fine aggregate and perhaps binder may be added to a harsh HMA to make the mixture more workable. Care is required to be taken to ensure that the altered HMA meets all the other design criteria.

Excess fines may also affect workability. Depending on the characteristics of the fines, the fines may cause the HMA to become tough or gummy, making the mixture difficult to compact. Workability is especially important where excessive hand placement and raking (luting) around manhole covers, sharp curves, and other obstacles is required. HMA used in such areas is required to be highly workable.

HMA that may be too easily worked or shoved is referred to as tender HMA. Tender HMA is too unstable to place and compact properly. This problem often is caused by a shortage of mineral filler, too much medium sized sand, smooth rounded aggregate particles, or excess moisture in the HMA.

Although not normally a major contributor to workability problems, the binder does have some effect on workability. Because the temperature of the HMA affects the viscosity of the binder, too low a temperature makes HMA unworkable. Too high a mixture temperature may make the mixture tender. Binder grade may also affect workability, as may the percentage of binder in the HMA. Figure 4-6 lists some of the causes and effects related to workability of paving mixes.

POOR WORKABILITY	
Causes	**Effects**
Large maximum size particle	Rough surface, difficult to place
Excessive coarse aggregate	May be hard to compact
Too low a HMA temperature	Uncoated aggregate, not durable, rough surface, hard to compact
Too much medium sized sand	HMA shoves under roller, remains tender
Low fines content	Tender HMA, highly permeable
High fines content	HMA may be dry or gummy, hard to handle, not durable

Figure 4-6. Causes and Effects of Workability Problems

FLEXIBILITY

Flexibility is the ability of a HMA pavement to adjust to gradual settlements and movements in the subgrade without cracking. Since virtually all subgrades either settle (under loading) or rise (from soil expansion), flexibility is a desirable characteristic for all HMA pavements.

An open graded HMA with high binder content is generally more flexible than a dense graded, low binder content HMA. Sometimes the need for flexibility conflicts with stability requirements, so that trade offs are required to be made.

FATIGUE RESISTANCE

Fatigue resistance is the pavement's resistance to repeated bending under wheel loads (traffic). Air voids (related to binder content) and binder viscosity have a significant effect on fatigue resistance. As the percentage of air voids in the pavement increases, either by design or lack of compaction, pavement fatigue life (the length of time during which an in-service pavement is adequately fatigue-resistant) is drastically shortened. Likewise, a pavement containing binder that has aged and hardened significantly has reduced resistance to fatigue.

The thickness and strength characteristics of the pavement and the supporting strength of the subgrade also have an effect on the pavement life and prevention of load associated cracking. Thick, well supported pavements do not bend as much under loading as thin or poorly supported pavements. Therefore, thick well supported pavements have longer fatigue lives.

Figure 4-7 presents a list of causes and effects of poor fatigue resistance.

POOR FATIGUE RESISTANCE	
Causes	**Effects**
Low asphalt binder content	Fatigue cracking
High design voids	Early aging of binder followed by fatigue cracking
Lack of compaction	Early aging of binder followed by fatigue cracking
Inadequate pavement thickness	Excessive bending followed by fatigue cracking

Figure 4-7. Causes and Effects of Poor Fatigue Resistance

SUPERPAVE MIX DESIGN METHOD

The Superpave mix design method is a volumetric mix design process. An analysis of specimens and the maximum specific gravity sample are conducted to evaluate such properties as voids in mineral aggregate (VMA), voids filled with asphalt (VFA), air voids, and the dust/effective binder ratio. The mix designer uses this information to determine the parameters that require adjustment before fabricating additional specimens. This process is repeated several times until the designed aggregate structure and the binder content produce specimens with the desired volumetric properties. Using the information obtained from this procedure, the mix designer then proceeds with preparing two specimens at four binder contents in preparation for determining the optimum binder content required to produce the four percent air voids at N_{des} gyrations.

AGGREGATES

The approach to the Superpave method of volumetric mix design begins with evaluating potential materials for use in the HMA mixture. The evaluation of aggregates is made for such properties as sand equivalency, fine and coarse aggregate angularity, and flat and elongated particles. By conducting these tests on individual aggregates prior to developing trial blends, the mix designer develops a history of the material, and may make a determination of the potential use of these materials in the design mixture.

Once the mix designer has selected the potential aggregates for use in the designed mixture, the aggregates are proportioned to comply with the composition limits specific to the nominal maximum particle size. If the mix designer has had no prior experience in working with the aggregates required for the mixture, several trial blends may be necessary as a time saving design technique. The 0.45 power gradation chart is used to plot the combined gradation of the HMA. Figure 4-8 illustrates several important features for a 12.5 mm HMA that the aggregate gradation is required to meet. These are explained as follows:

1) Maximum Size -- One sieve size larger than the nominal maximum size.

2) Nominal Maximum Size -- One sieve size larger than the first sieve to retain more than 10 percent.

3) Maximum Density Line -- a gradation in which the aggregate particles fit together in their densest possible arrangement. This is a gradation to avoid because there would be very little aggregate space within which to develop sufficiently thick binder films for a durable HMA.

4) Primary Control Sieve (PCS) Control Points -- values that define whether a gradation is coarse-graded or fine-graded. A gradation passing below the PCS Control Point is considered coarse-graded, and a gradation passing above the PCS Control Point is considered fine-graded.

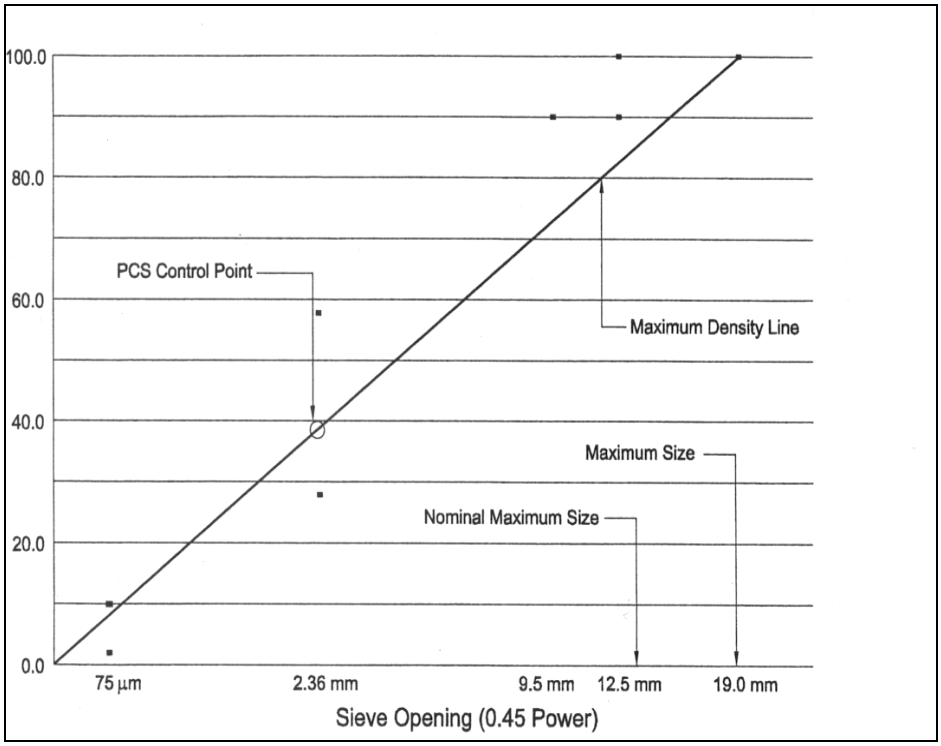

Figure 4-8. Superpave Gradation Limits for 1/2 in. Mixture

SUPERPAVE SPECIMENS

From the aggregate blend, the mix designer estimates the binder demand needed for the selected aggregate structure and proceeds with preparing a maximum specific gravity sample and a set of 150 mm specimens for compaction in the Superpave gyratory compactor. The gyratory simulates the mix densities achieved under the actual pavement climate and loading conditions. This device is capable of accommodating large aggregate, recognizing potential tender mix behavior and similar compaction problems, and is well suited for mixing plant quality control operations. The compactor is designated the Superpave Gyratory Compactor (SGC). Figure 4-9 illustrates a generic SGC and Figure 4-10 illustrates the SGC mold configuration and compaction parameters. The internal angle of gyration of the SGC is required to be 1.16 ± 0.02°.

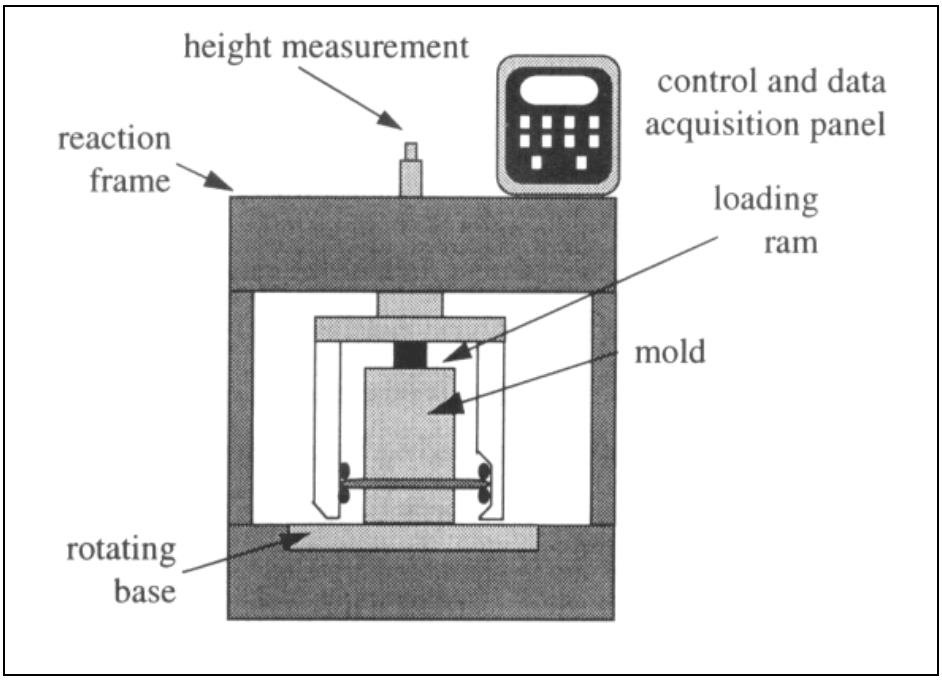

Figure 4-9. Superpave Gyratory Compactor

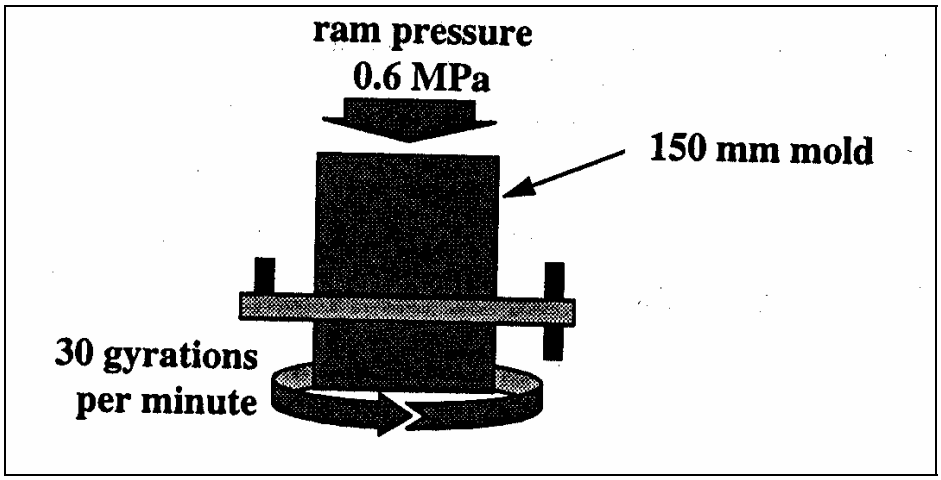

Figure 4-10. SGC Mold Configuration and Compaction Parameters

Specimens compacted with the Superpave gyratory compactor in the mix design are analyzed at a different number of gyrations depending on the traffic for the contract and whether the mixture is a dense graded, open graded, or a SMA mixture (Figure 4-11). The procedure used for preparing Superpave specimens is **AASHTO T 312**. Three gyration levels are of interest:

Ndes = design number of gyrations
Nini = initial number of gyrations
Nmax = maximum number of gyrations

GYRATORY COMPACTION EFFORT					
ESAL	**Nini**	**Ndes**	**Nmax**	**Max. % Gmm@Nini**	**Max.% Gmm @Nmax**
DENSE GRADED					
< 300,000	6	50	75	91.5	98.0
300,000 to 3,000,000	7	75	115	90.5	98.0
3,000,000 to < 10,000,000	8	100	160	89.0	98.0
10,000,000 to < 30,000,000	8	100	160	89.0	98.0
> 30,000,000	9	125	205	89.0	98.0
OPEN GRADED					
ALL ESAL	NA	20	NA	NA	NA
SMA					
ALL ESAL	NA	100		NA	NA

Figure 4-11. Superpave Gyratory Compactive Effort

The compactive efforts Nini and Nmax are used to evaluate the compatibility of the HMA, while Ndes is used to select the binder content. A maximum percentage of the theoretical density (Gmm) requirement at Nini insures an adequate aggregate structure in the HMA. A maximum percentage of the maximum theoretical density (Gmm) requirement at Nmax insures that the HMA does not compact excessively under the anticipated traffic, resulting in permanent deformation or rutting.

Specimens in the mix design are compacted to N_{des} at each increment of binder content to evaluate the required air voids and VMA. After a mix design binder content has been estimated, two specimens are compacted to N_{des} at each of the following four binder contents:

1) The estimated design binder content, P_b (design)

2) 0.5 percent below P_b (design)

3) 0.5 percent above P_b (design)

4) 1.0 percent above P_b (design)

Figure 4-11 lists the requirements at the optimum binder content for Maximum % G_{mm} at N_{max} and Maximum % G_{mm} at N_{ini}.. The Maximum % G_{mm} at N_{max} is determined by compacting the mixture to N_{max}, measuring the bulk specific gravity, and calculating the % G_{mm} using the Maximum Specific Gravity value at the optimum binder content. The Maximum % G_{mm} at the N_{ini} is determined by the following formula:

$$\%G_{mm} = 100x\frac{G_{mb}xh_d}{G_{mm}xh_i}$$

where:

G_{mb} = bulk specific gravity at N_{des}
G_{mm} = theoretical maximum specific gravity at N_{des}
h_d = height of specimen at N_{des}
h_i = height of specimen at N_{ini}

An example of the plots of the data is shown in Figure 4-12. All plots are generated automatically by the Superpave software.

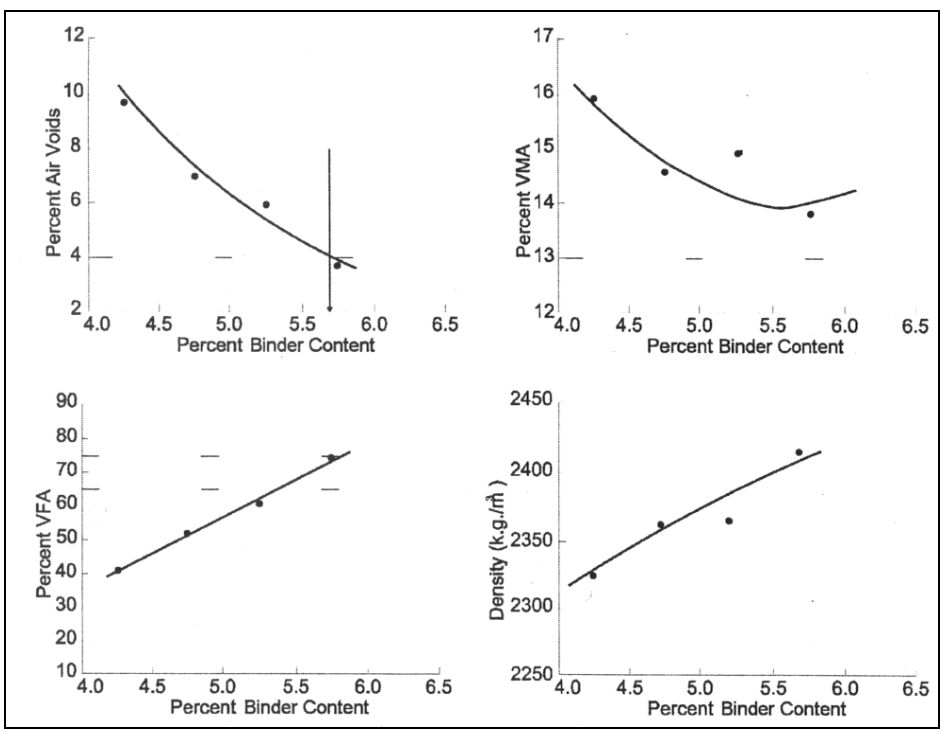

Figure 4-12. Gyratory Densification Data

To determine the maximum specific gravity when weighing in water (**AASHTO T 209 – Section 9.5.1**), the dry fine fraction of the mixture is first broken into pieces no larger than 1/4 in. diameter. The entire dry loose mixture is weighed, placed in a tared vacuum container, and covered with water. A partial vacuum of 25.5 to 30 mm Hg is applied to the container for 15 ± 2 minutes. The container and contents are agitated during the vacuum period, either by a mechanical device or manually by vigorous shaking at intervals of about 2 minutes. At the end of the vacuum period, the vacuum is gradually released. The container and contents are suspended in a water bath and the weight determined after 10 ± 1 min immersion. The container is immediately emptied and weighed totally submerged in the water bath. Calculations are as follows:

$$\text{Maximum Specific Gravity } (Gmm) = \frac{A}{A-(C-B)}$$

where:
A = weight of oven dry sample in air, g
B = weight of container in water, g
C = weight of container and sample in water, g

To determine the maximum specific gravity when weighing in air, follow the procedure for weighing in water is used until the vacuum period is complete and the vacuum released. The container is then filled with water at 77 ± 1.8° F and weighed (**AASHTO T 209 – Section 9.5.2)**). Calculations are as follows:

$$\text{Maximum Specific Gravity } (Gmm) = \frac{A}{A+D-E}$$

where:
A = weight of oven dry sample in air, g
D = weight of container filled with water at 77° F, g
E = weight of container filled with sample and water at 77° F, g

A supplemental procedure for mixtures containing porous aggregate is recommended when the HMA contains an individual aggregate with a water absorption of 1.5 percent or greater. The procedure requires the sample to be spread before an electric fan to remove the surface moisture. The sample is weighed at 15-minute intervals until the loss in weight is less than 0.05 percent for this interval. This weight is designated the surface dry weight. Calculations are as follows:

$$\text{Maximum Specific Gravity } (Gmm) = \frac{A}{A_1-(C-B)}$$

where:
A = weight of oven dry sample in air, g
A_1 = weight of surface dry sample, g
B = weight of container in water, g
C = weight of container and sample in water, g

To determine the bulk specific gravity of dense graded mixtures, the compacted specimens are extruded from the mold, cooled to room temperature, and the dry weight recorded. (A cooling period of 10 ± 1 minutes in front of a fan is necessary before extruding the specimens to insure the specimens are not damaged). Each specimen is then immersed in water at 77 ± 1.8° F for three to five minutes, and the immersed weight is recorded. The specimen is removed from the water, surface dried by blotting with a damp cloth, and the surface dry weight recorded in air (**AASHTO T 166**). The bulk specific gravity of the specimen is calculated as follows:

$$\text{Bulk Specific Gravity } (Gmb) = \frac{A}{B - C}$$

where:
A = weight of specimen in air, g
B = weight of surface-dry specimen in air, g
C = weight of specimen in water, g

The bulk specific gravity may be converted to density by multiplying by 62.416 lb/ft^3.

Upon completion of the test, the percent water absorbed by the specimen is calculated as follows:

$$\text{Percent Water Absorbed by Volume} = \left(\frac{B - A}{B - C}\right) \text{ x } 100$$

If the percent water absorbed by the specimen exceeds 2.0 %, the procedure using paraffin-coated specimens (**AASHTO T 275**) is used. This procedure requires that the specimen be coated with paraffin prior to weighing in water. The bulk specific gravity of the paraffin-coated specimens is calculated as follows:

$$\text{Bulk Specific Gravity (Gmb)} = \frac{A}{D - E - \left(\frac{D - A}{F}\right)}$$

where:
A = weight of dry specimen in air, g
D = weight of dry specimen plus paraffin coating in air, g
E = weight of dry specimen plus paraffin in water, g
F = specific gravity of the paraffin at 77 ± 1.8°F (use 0.9)

To determine the bulk specific gravity of open graded mixtures, the compacted specimens are extruded from the mold, cooled to room temperature, and the dry weight recorded **(AASHTO T 331).** A longer cooling period before extruding the specimen is required for open graded mixtures than dense graded mixtures because of the significant number of voids in the open graded mixture. Each specimen is sealed in a plastic bag using a vacuum sealing device, weighed in air, and then weighed submerged in water at 77° F. The specimen is removed from the bag and weighed to determine the amount of water that is absorbed. The bulk specific gravity of the specimen is calculated as follows:

$$Gmb = \frac{A}{B - E - \left(\frac{B - A}{F_T}\right)}$$

where:

A = weight of dry specimen in air, g
B = weight of dry, sealed specimen, g
E = weight of sealed specimen in water, g
(weight of absorbed water is subtracted)
Ft = apparent specific gravity of plastic sealing material at 77°F

The bulk specific gravity may be converted to density by multiplying by 62.416 lb/ft^3.

Upon completion of the test, the percent water absorbed by the specimen is calculated as follows:

$$\text{Water Absorption, percent} = \left(\frac{A_1 - A}{A}\right) \times 100$$

where:

A_1 = weight of specimen removed from bag after weighing in water, g.

DUST PROPORTION

The dust proportion is computed as the ratio of the percentage by weight of aggregate finer than the No. 200 sieve to the calculated effective binder content expressed as a percent of total mix. The dust proportion is calculated as follows:

$$\text{Dust Proportion} = \frac{P_{200}}{Pbe}$$

where:
P_{200} = aggregate content passing the No. 200 sieve, percent by weight of aggregate
Pbe = effective binder content, percent by total weight of mixture

The absorbed asphalt (*Pba*) is first calculated and then the effective binder content (*Pbe*) is determined.

$$\text{Absorbed Asphalt } (Pba) = 100 \text{ x } \left(\frac{Gse - Gsb}{Gsb \times Gse}\right) \text{ x } Gb$$

where:
Gse = effective specific gravity of aggregate
Gsb = bulk specific gravity of aggregate
Gb = specific gravity of binder

$$\text{Effective Binder Content (Pbe)} = Pb - \left(\frac{Pba}{100} \times Ps\right)$$

where:
Pb = binder content, percent by total weight of mixture
Ps = aggregate content, percent by total weight of mixture

AIR VOIDS

Once the bulk specific gravity and maximum specific gravity of the HMA have been determined, the air voids (*Va*) are calculated as follows:

$$\text{Air Voids } (Va) = 100 \text{ x } \left(\frac{Gmm - Gmb}{Gmm}\right)$$

where:
Gmm = Maximum Specific Gravity of HMA
Gmb = Bulk Specific Gravity of HMA

VOIDS IN THE MINERAL AGGREGATE

The voids in the mineral aggregate (VMA) is determined on the basis of bulk specific gravity of the aggregate and is expressed as a percentage of the bulk volume of the compacted mix. Therefore, VMA is calculated by subtracting the volume of the aggregate determined by the bulk specific gravity from the bulk volume of the compacted HMA as follows:

$$\text{Voids in the Mineral Aggregate } (VMA) = 100 - \left(\frac{Gmb \times Ps}{Gsb}\right)$$

where:
Gmb = Bulk Specific Gravity of HMA
Gsb = Bulk Specific Gravity of aggregate
(obtained from design mix formula)
Ps = Aggregate, percent by total weight of HMA

The percent of aggregate by total weight of HMA (Ps) is determined by subtracting the actual binder content by total weight of HMA (Pb) supplied on the design mix formula from 100.

$$Ps = 100 - Pb$$

VOIDS FILLED WITH ASPHALT

The voids filled with asphalt (VFA) is the percentage of the VMA that contains binder. The VFA is calculated as follows:

$$\text{Voids Filled with Asphalt } (VFA) = \left(\frac{VMA - Va}{VMA}\right) \text{x } 100$$

RECYCLED MATERIALS

Recycled materials may be used in QC/QA HMA and HMA mixtures provided that the recycled mixture adheres to the same criteria as a mixture without any recycled materials. Recycled materials are not permitted for category 3, 4, or 5 QC/QA HMA surface mixtures, type C and type D HMA surface mixtures, or open graded mixtures. Recycled materials may consist of reclaimed asphalt pavement (RAP), or asphalt roofing shingles (ARS), or a blend of both. RAP is the product resulting from the cold milling or crushing of an existing HMA pavement. ARS is waste from a shingle manufacturing facility; however, no tear-off materials from roofs are allowed to be used as ARS.

When only RAP is used in the mixture, the RAP may not exceed 25.0 percent by weight of the total mixture. When only ARS is used in the mixture, the ARS may not exceed 5.0 percent by weight of the total mixture. For substitution or use, 1.0 percent of ARS is considered equal to 5.0 percent RAP. For QC/QA HMA, when 15.0 percent or less of RAP is used, the grade of binder for the mixture remains the same. However, when more than 15.0 percent and up to 25.0 percent RAP is used, the binder grade is reduced by one temperature classification, 6°C, for both the upper and lower temperature classifications. The following table illustrates this requirement:

QC/QA HMA		
Specified PG Grade	**≤15.0% RAP**	**>15.0 to 25.0% RAP**
64-22	64-22	58-28
70-22	70-22	64-28
76-22	76-22	70-28

For HMA mixtures, when 15.0 percent or less of RAP is used, the grade of binder for the mixture remains the same. However, when more than 15.0 percent and up to 25.0 percent RAP is used, the binder grade is reduced by one temperature classification, 6°C, for the upper temperature classification and -28°C is used for the lower temperature classification. The following table illustrates this requirement:

HMA		
Specified PG Grade	**≤ 15.0 % RAP**	**> 15.0 to 25.0 % RAP**
64-22	64-22	58-28
70-22	70-22	64-28

MOISTURE SUSCEPTIBILITY

The final process required in the volumetric mix design is to check the moisture susceptibility of the HMA. The procedure used is **AASHTO T 283**, except that the loose mixture curing is replaced by mixture conditioning for 2 h in accordance with **AASHTO R 30**. Regardless of the mixture designation, all Superpave mixtures are required to meet a minimum tensile strength ratio (TSR) of 80 %.

EXAMPLE CALCULATIONS

A sample of the aggregate and compacted HMA are known to have the following properties. The density, air voids, VMA, VFA, and Dust Proportion are determined as follows:

Effective Specific Gravity of Aggregate (Gse) = 2.726
Specific Gravity of Binder (Gb) = 1.030
Bulk Specific Gravity of Mix (Gmb) = 2.360
Bulk Specific Gravity of Aggregate (Gsb) = 2.715
Maximum Specific Gravity of Mix (Gmm) = 2.520
Binder Content (Pb) = 5.0 percent of weight of total mix
Aggregate Passing No. 200 (P 200) = 5.3

Density D = Gmb x 62.416 lb/ft^3
= 2.360 x 62.
= 147.3 lb/ft^3

Air Voids Va $= 100 \text{ x } \left(\frac{Gmm - Gmb}{Gmm}\right)$

$= 100 \text{ x } \left(\frac{2.520 - 2.360}{2.520}\right)$

= 100 x .063
= 6.3 %

VMA Ps = 100 - Pb
= 100 - 5.0
= 95.0 %

VMA $= 100 - \left(\frac{Gmb \times Ps}{Gsb}\right)$

$= 100 - \left(\frac{2.360 \times 95.0}{2.715}\right)$

= 100 - 82.6
= 17.4 %

VFA VFA $= \left(\frac{VMA - Va}{VMA}\right) \text{ x } 100$

$= \left(\frac{17.4 - 6.3}{17.4}\right) \text{x } 100$

= 64 %

Dust Proportion $Pba = 100 \times \frac{2.726 - 2.715}{2.715 \times 2.726} \times 1.030$

$= 100 \times \frac{.011}{7.401} \times 1.030$

$= 0.15$

$Ps = 100 - 5.0 = 95.0$

$Pbe = 5.0 - \left(\frac{0.15}{100} \times 95.0\right)$

$= 5.0 - 0.1$

$= 4.9$

Dust Proportion $= \frac{P_{200}}{P_{be}} = \frac{5.3}{4.9} = 1.1$

STONE MATRIX ASPHALT

Stone Matrix Asphalt (SMA) is a tough, stable, rut-resistant mixture that relies on stone-to-stone contact to provide strength and a rich mortar binder to provide durability. The stone-to-stone contact is obtained by designing with an aggregate skeleton that consists of a large percentage of very durable coarse aggregate. The mortar consists of asphalt binder, mineral filler (material passing the No. 200 sieve), and a stabilizing additive of either cellulose or mineral fibers.

The primary advantage of SMA is the expected extended life as compared to conventional dense-graded mixtures. This extended life is the result of better rut resistance and the potential to reduce reflection cracks. Other potential advantages are the reduction in tire splash and spray, and traffic noise.

The mix design requirements of SMA that are different than dense-graded mixtures include the following:

1) A minimum VMA of 17.0 is required

2) A draindown test **(AASHTO T 305)** to determine the amount of mortar that drains from the SMA at the plant-production temperature is conducted.